Global RAIS® DUO Rooftop System

Installation Manual

GR UIG 10015.10

Global RAIS® Energy & Storage Solutions
2905 Westcorp Blvd, Suite 213
Huntsville, AL 35805

Toll free: 877-432-1010
www.globalrais.com
info@globalrais.com
@globalrais1

Simply More Energy

About Global RAIS®

Global RAIS® Energy & Storage Solutions designs, manufactures and markets a unique photovoltaic module that provides unmatched production, reliability and safety.

Copyright Notice

Trademarks and Patents

Disclaimer

Global RAIS® makes no express or implied warranty as to the accuracy, suitability, or completeness of the information provided in its documentation. Global RAIS® assumes no liability for loss or damage which results from the use of such information. Use of this information will be assumed to be at the user's risk. The native language of all documentation is U.S. English. While every effort has been made to ensure the accuracy of this documentation, any translations into other languages cannot be guaranteed for accuracy.

Contact Information

Global RAIS® Energy & Storage Solutions
2905 Westcorp Blvd
Suite 213
Huntsville, AL 35805
USA

Telephone: (256) 513-9462

Email: info@globalrais.com
Website: www.globalrais.com

About Global RAIS Energy & Storage Solutions

Global RAIS provides a photovoltaic solar solution that delivers on the promise of the lowest cost of solar electricity, while at the same time improving power density, safety, longevity and bankability of photovoltaic systems. Since its introduction in 2008 as Ten K Solar, Global RAIS® has been a leading innovator in the delivery and implementation of photovoltaic solar systems for commercial customers. More information about Global RAIS is available online at www.globalrais.com

Contents

Introduction

Welcome to Simply More Energy! The Global RAIS® DUO Rooftop PV System is a unique approach to solar energy generation that delivers the best value in solar today!

This guide describes the proper method to install the Global RAIS® DUO System on flat roofs.

The DUO PV system is designed for flexibility, safety, ease of installation and simple maintenance. Please be sure to follow this instruction guide carefully to meet its design goals. We are happy to partner with you in making the world a cleaner, better place.

Caution: It is important that the installer read through all instructions carefully and layout a project plan prior to beginning physical installation. Any concerns or questions the installer may have should be directed to Global RAIS®. Additional information can be found at www.tenKsolar.com.

Caution: The instructions contained in this installation manual are guidelines. Actual project details and considerations vary greatly. Please consult with your structural engineer and authorities having jurisdiction in order to validate that these guidelines are acceptable for your project installation.

DUO Rooftop System Overview

The DUO Rooftop System array is comprised of Global RAIS® Modules and Global RAIS® Inverter Buses mounted on rails on a flat, or very gently sloped, roof. Complete details of system assembly are provided in this document.

The Global RAIS® Module is protected by its integrated electronics to only produce energy when the system is safely connected to the grid. The Global RAIS® Inverter Bus provides the system's DC-AC inversion.

In the DUO system the Global RAIS® Modules are installed in a bi-directional wave pattern that offers complete PV coverage of the installation space ***(see Figure 1)***. This wave pattern creates a wind shield that adds to the system's structural integrity.

Follow all applicable local codes and regulations when installing the array.

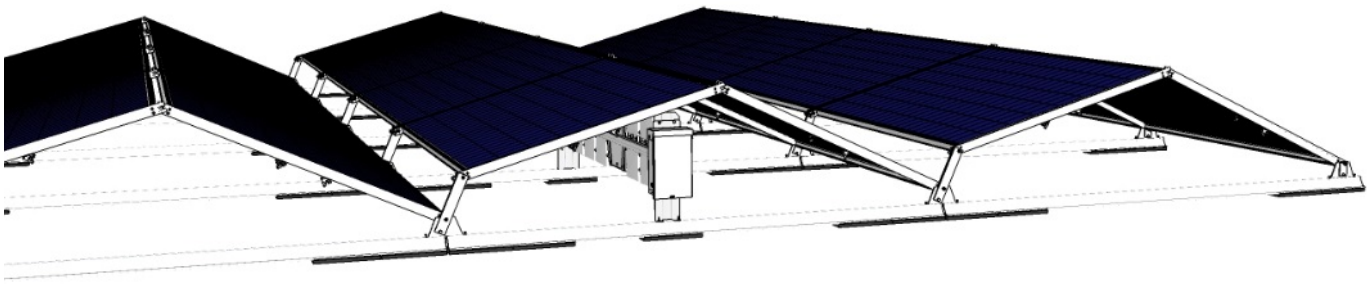

Figure 1

Hardware and Tools

Global RAIS® Fastening Hardware

Use only specified fasteners with the Global RAIS® PV system. Replacing the specified fasteners with unapproved fasteners could disrupt the electrical grounding circuit and could result in damage to the panels or reflectors, or to nearby personnel or property. Replacing the specified fasteners with unapproved fasteners will void the warranty.

Description	Locations Used
¼" Star Washer, Stainless Steel	Fin-Rail connection; AC disconnect-Inverter Bus Bracket connection
¼"-20 X ⅝" Stainless Steel Hex Head Cap Screw	Fin-Rail connection
¼"-20 X ¾" Stainless Steel Hex Head Bolt	AC disconnect-Inverter Bus Bracket connection
¼"-20 Stainless Steel Combination Hex Nut with Star Washer	AC disconnect-Inverter Bus Bracket connection
$^{5}/_{16}$"-18 x 1" Stainless Steel T-bolt	Inverter Bus Bracket-Rail connection
$^{5}/_{16}$"-18 x 3" Stainless Steel Threaded Stud	Fin-Module connection
$^{5}/_{16}$"-18 Stainless Steel Combination Hex Nut with Star Washer	Fin-Module connection, Inverter Bus Bracket- Rail connection
Chamfered Aluminum Pin with Hair Pin Cotters	Module-Module connection
Module Keeper Plug	Fin-Module connection

Recommended Tools

You will need the following tools for the proper installation of the Global RAIS® DUO PV System. Additional tools may be required based on your specific site requirements.

Standard Tools
$^{7}/_{16}$" hex socket; ½" hex socket and ½" deep hex socket
A torque wrench with an effective working range that includes 12 ft-lbs and a minimum resolution of 1 ft-lb
$^{3}/_{16}$" hex key
Special Tools, available for sale by Global RAIS®
Global RAIS® Fin Spacing Tool - Ensures that each fin is located exactly the correct distance apart.

Mechanical Installation

Flat Roofs

The DUO system excels for commercial flat roof applications. Generally, roofs with slopes of less than 1" of rise per 1' of run are considered "flat." More commonly, commercial flat roofs have a slope of ⅛-¼" per foot.

A commercial flat roof will have small peaks and valleys for drainage. The Global RAIS® DUO system is generally insensitive to the location of these peaks and valleys, but some care should be taken when designing the system. Rail connections allow some north-south compliance in the system and should be placed over east-west peaks or valleys. North-south peaks or valleys should generally be placed in aisles between arrays.

A commercial flat roof will sag slightly under loading (e.g., snow loads). The Global RAIS® DUO system can tolerate small amounts of sag in the roof under variable loading. If a roof sags more than 1-2" in a 24' span, you may have interference issues when installing. A roof with this much sagging may also have underlying structural issues. Consult your structural engineer to ensure the roof has adequate strength and stiffness for the loading from the array.

The array can be placed over small obstructions like drain baskets or small plumbing vents. Larger obstructions that do not cause excessive shading can be accommodated by leaving a reflector or a module/reflector pair out of the array.

Build from South to North

It is strongly advised to build the array from the front (south) to the back (north). This will make it easier to connect modules together. This manual will show the array being constructed that way.

Rails

You will receive two – and sometimes three – different lengths of rails with your shipment:

Rail Type	Length	Where Used	Marking
Interior	102 ⅜”	All locations where there will be another rail adjacent to both ends of the rail	None
Front/Rear	107 ½”	All locations where there will be another rail adjacent to one end of the rail, but not to both ends of the rail	Black line, both sides, each end
Double Long	111 ¾”	All locations where there will be no rail adjacent to either end of the rail (infrequently used)	None

The interior rails and the front/rear rails will be separated when they arrive, generally on different pallets.

Attach Roof Pads to Rails

Apply six self-adhering rubber buttons (supplied) to each end of the bottom of the rail. Space them 3" (± ½") from the rail end and from each other, along the center of the rail ***(see Figure 2).***

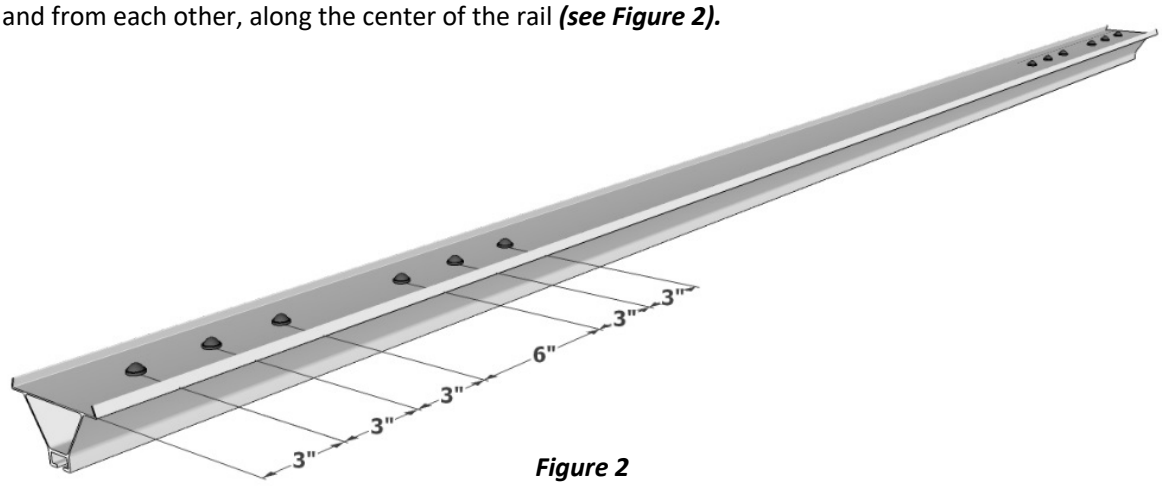

Figure 2

Snap two 4" x 12" x 1" foam pad in between the rail flanges and over the buttons at each end of rail ***(see Figure 3).***

Note: the rubber buttons are necessary to transfer lateral wind loads to the pad (and thus the roof) and are therefore essential to the structural integrity of the system. Do not omit the rubber buttons.

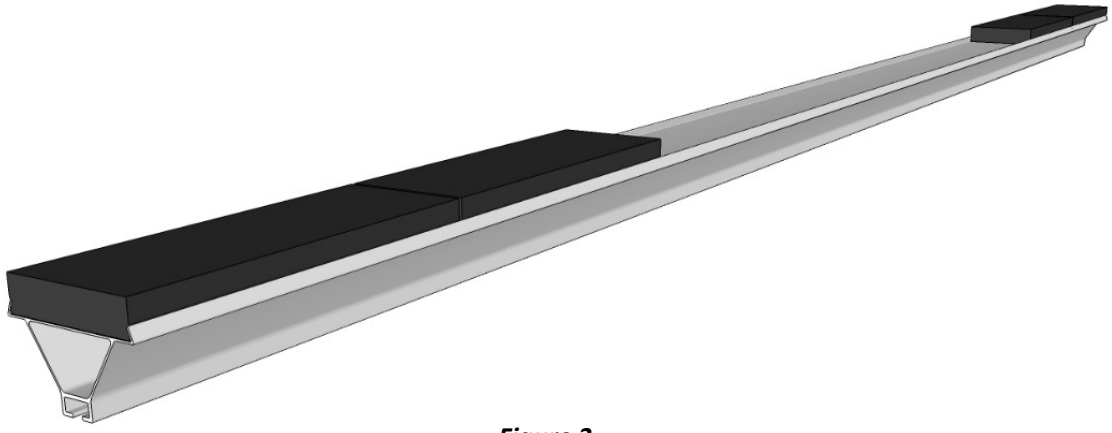

Figure 3

Additional Pads

For rails that will support ballast, inverters, or other equipment, additional roof pads are required to distribute the weight on the roof. To the four pad configuration shown in ***Figure 3***, add the following number of additional pads to **each** affected rail:

Inverter bus mounted on rail	Add 1 pad, under the inverter bus area
Ballast up to 150 lbs total touching rail	Add 1 pad, equally spaced from rail ends
Ballast of 150-250 lbs total touching rail	Add 2 pads, equally spaced from rail ends
Ballast of 250-350 lbs total touching rail	Add 3 pads, equally spaced from rail ends
Ballast over 350 lbs total touching rail	Add 4 pads, equally spaced from rail ends

Note:

- **Install three additional self-adhering rubber buttons, as above, for each additional pad.**
- If a rail supports both an inverter bus and ballast, add the combined number of pads.
- **Install additional pads as needed before building out your array.**
- Sweep away loose rock where pads contact roof before placing rails on roof.

Install First Fins

The fins connect the modules to the rails and connect the rails to each other. The DUO system uses two different fins ***(see Figure 4)***. They come pre-assembled with necessary hardware as shown. The tall fins are asymmetrical and must be oriented correctly. The tall fins connect the rails.

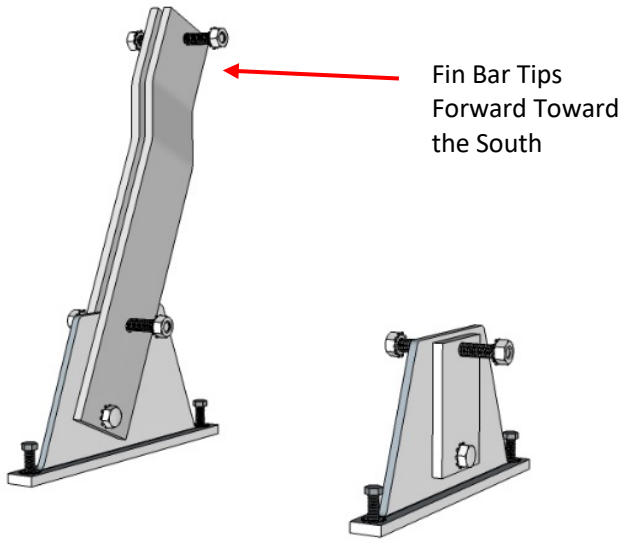

Figure 4

Slide the base of a tall fin half way into the north end of a **front/rear** rail (107 ½" rail) ***(see Figure 5).*** Tighten the front ¼"-20 × ⅝" cap screw to 6 ft-lbs.

Allow the star washer to slide into the rail with the fin foot. The star washer is an integral part of the electrical grounding system *(see Figure 6).*

It is not advised to tighten, loosen, and re-tighten the ¼"-20 × ⅝" cap screw – for instance if disassembling, moving, and then re-assembling an array – more than five times without replacing the rail.

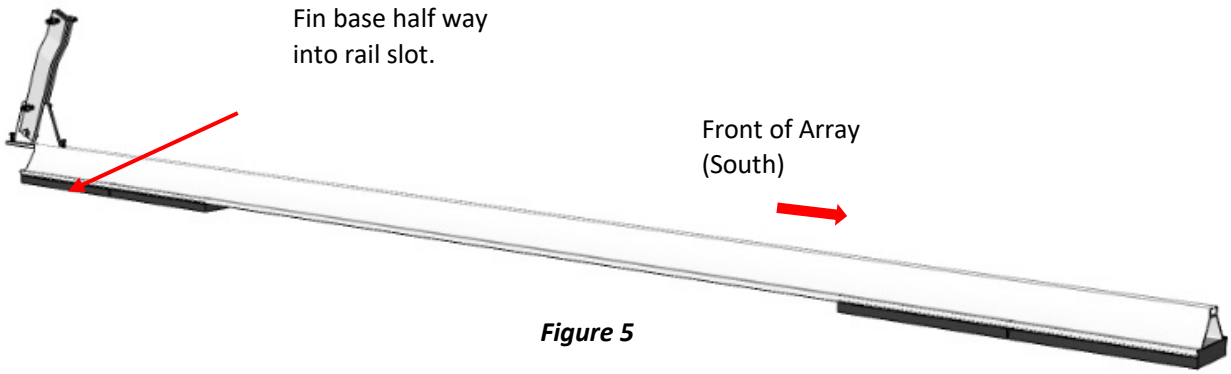

Figure 5

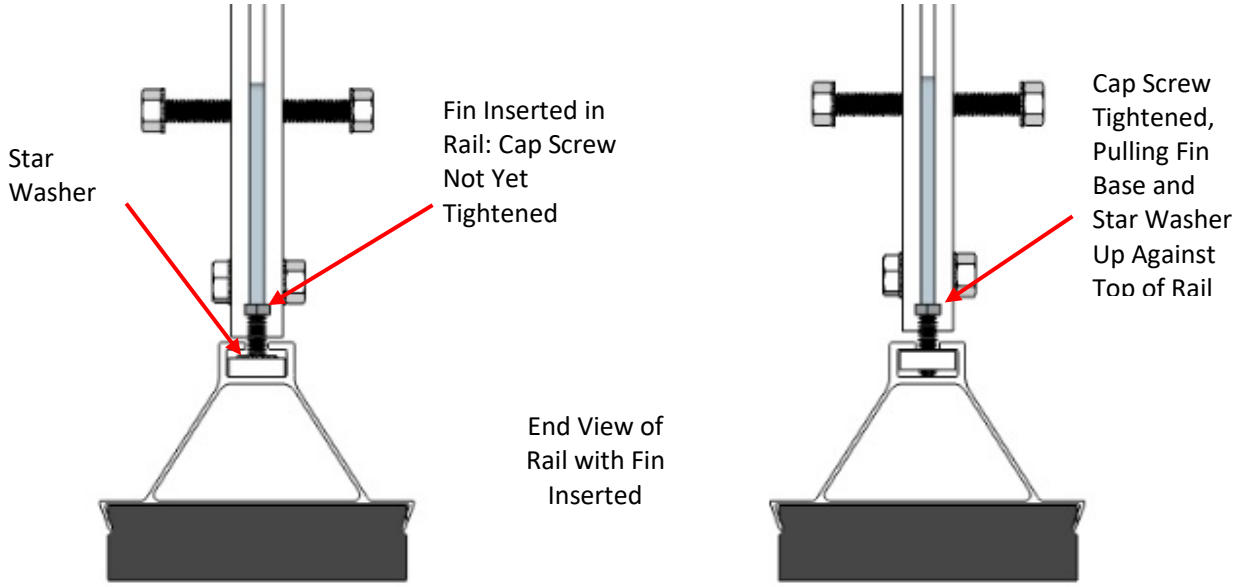

Figure 6

Locate and Secure the Short Front Fin

Slide a short fin into the other end of the rail. Use the fin spacing tool to set the correct distance between the fins ***(see Figure 7).*** The fin spacing tool will arrive, with instructions, bolted in its collapsed state for easy transport; assemble it to its expanded state before use.

Place the single slot in one end of the assembled fin spacing tool over the lower threaded stud in the tall rear fin. Adjust the position of the short front fin until the **outboard** slot in the other end of the fin spacing tool drops over its tap bolt. Once the fin has been thus properly located by the fin spacing tool, tighten the short front fin's two ¼"-20 x ⅝" cap screws to 6 ft-lbs.

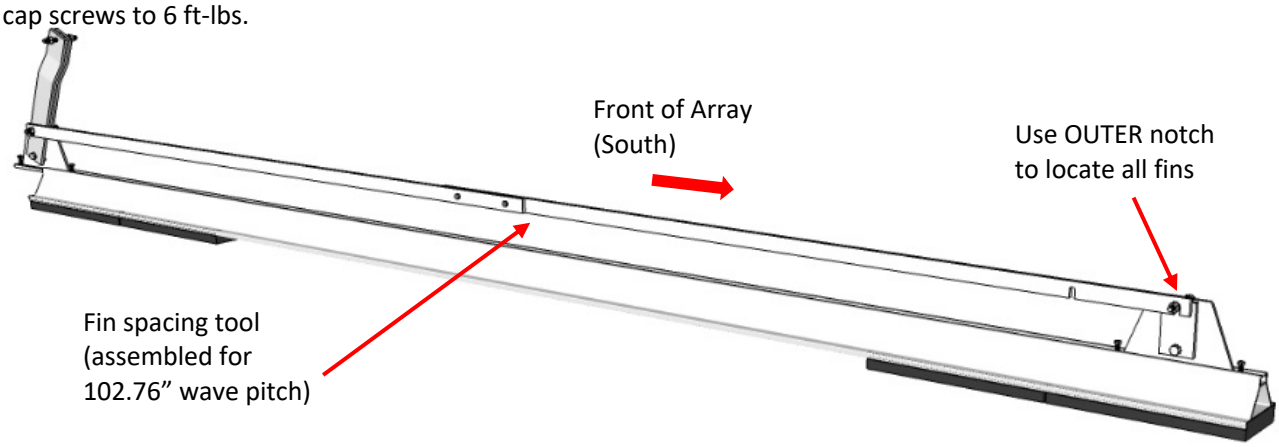

Figure 7

Connect a Second Rail

Slide an interior (102 ⅜”) rail onto the rear half of the tall fin base. Leave a gap of about ⅜” between the rails. Tighten the tall fin’s rear ¼"-20 x ⅝" cap screw to 6 ft-lbs ***(see Figure 8).***

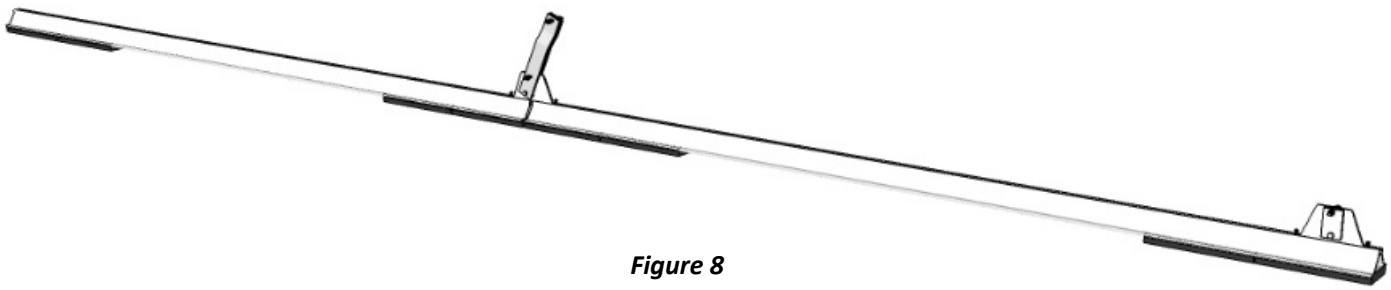

Figure 8

Assemble and Place a Second Two-Rail Section

Repeat the above steps to assemble another two-rail section. Place it approximately 80 ⅛” to the east or west of the original section ***(see Figure 9).***

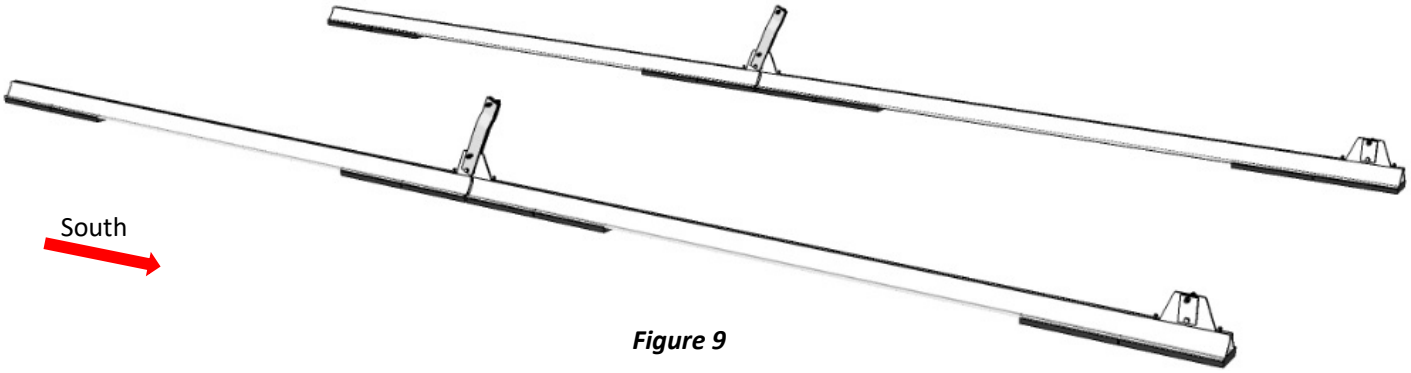

Figure 9

Install First Module

Orient a module with its electrical connector lugs to the east or west, per your wiring plan. Generally it is best to keep the lugs on the perimeter of the array on the inboard side. Slip the slots in the module’s frame over the **lower** threaded studs on the tall fins, in the space between the fins. Adjust the spacing between rails as necessary to accommodate the module ***(see Figure 10).***

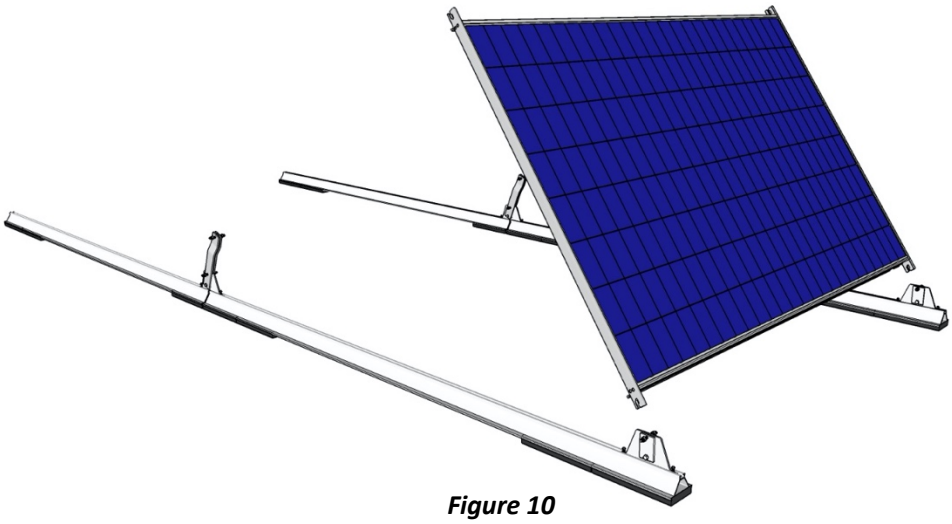

Figure 10

Be sure that the dog-leg slot in the module frame seats properly on the fin tap bolt. ***See Figure 11.***

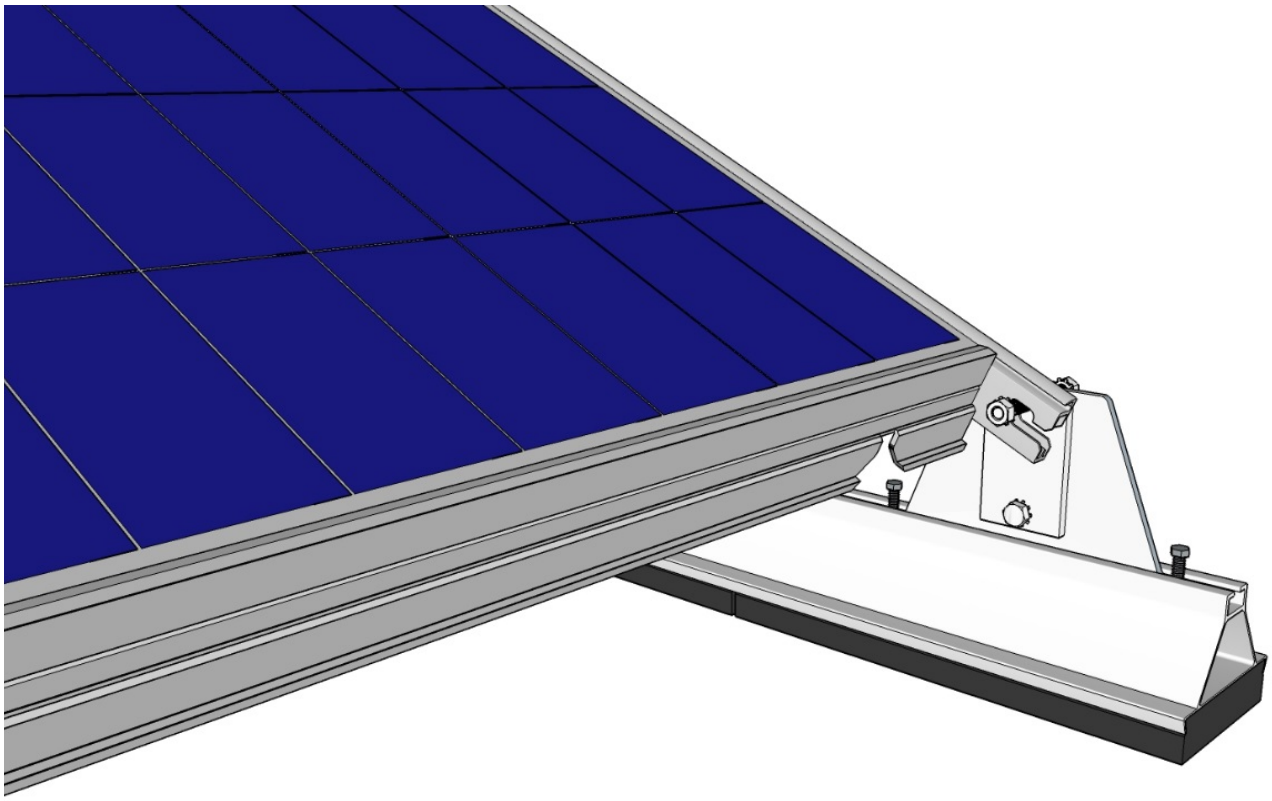

Figure 11

Lay the top of the first module down onto the rails. Slip the slots in the second module's frame over the **upper** threaded studs on the rear fins, **between** the fins. Be sure that the dog-leg slot in the module frame sits properly on the stud bolts. Lift the first module and bring the tops of both modules together to form a peak ***(see Figure 12).***

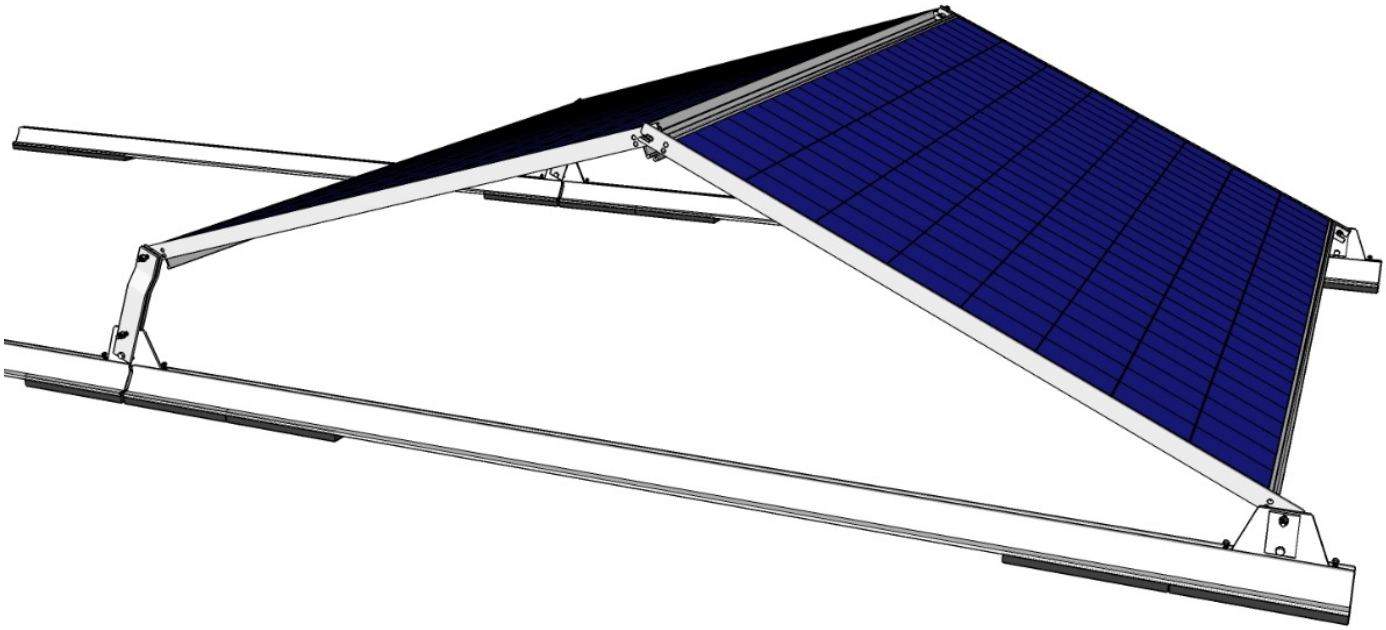

Figure 12

Insert one hairpin cotter into the flat end of a chamfered aluminum pin. Starting on the side of the module pair that will be the outer edge of the array section, secure the peak by pushing the aluminum pin through the holes in the top of each module's frame. Push the pin in until the hairpin cotter stops its travel ***(see Figure 13)***. Then insert a second hairpin cotter in the middle hole of the aluminum pin.

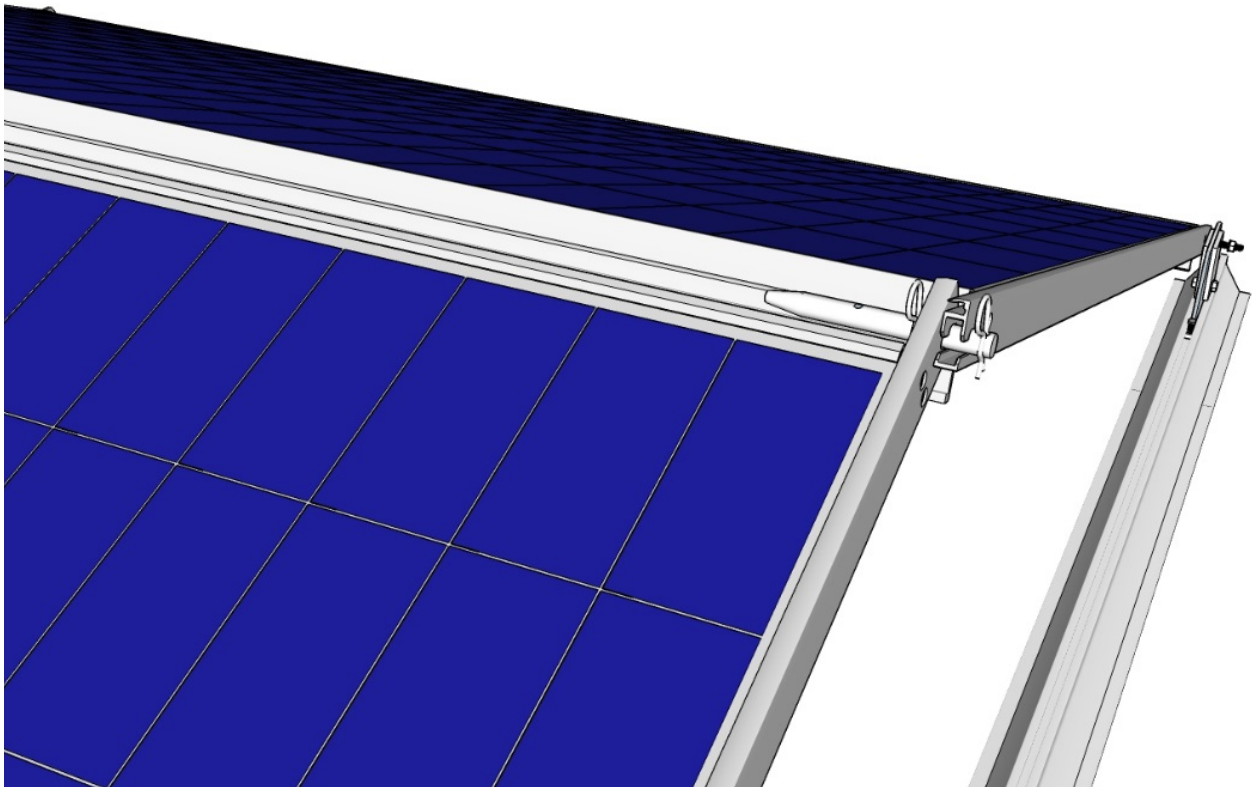

Figure 13

On the other pair of module frame extensions – the side where the array will continue – push an aluminum pin with a hairpin cotter in its flat end into the module frame holes just far enough to hold them ***(see Figure 14)***. You will push the aluminum pin in the rest of the way, and add a second hairpin cotter, when the next module pair is installed.

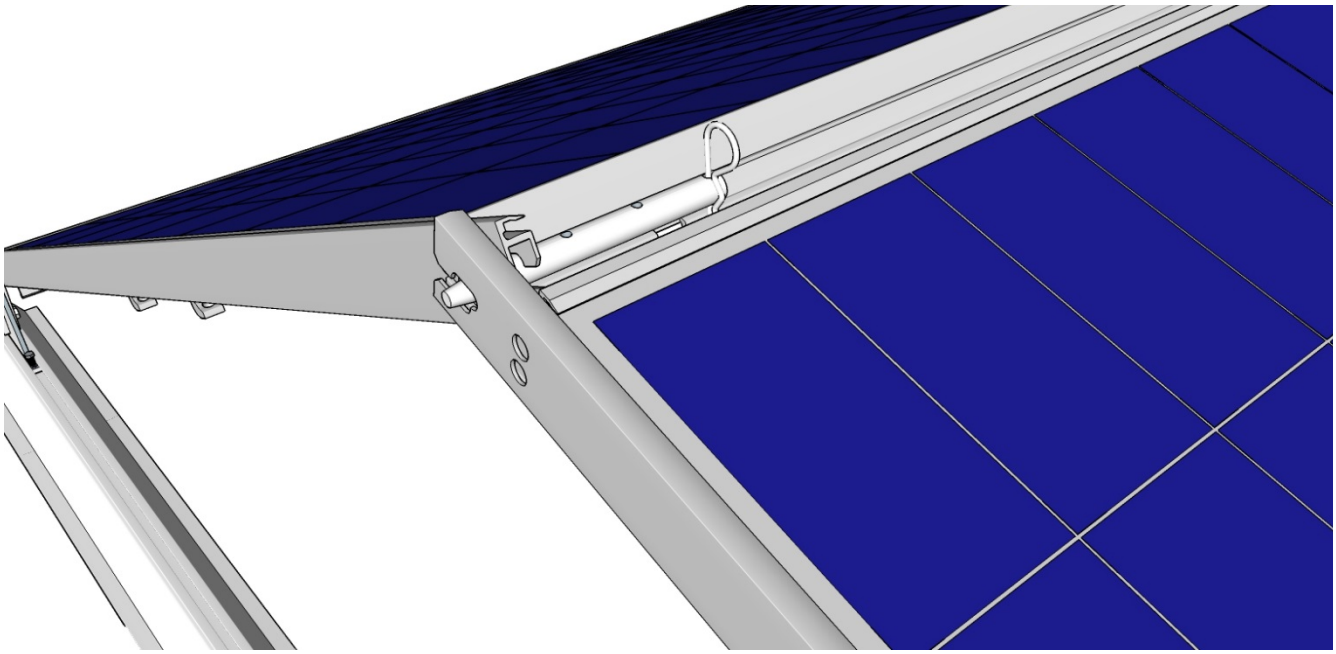

Figure 14

Install Keeper Plugs, Torque Threaded Stud Nuts

After the module pair has been secured with the chamfered pins, insert a module keeper plug in all four of the lower module frame ends, both front and back. Push the module keeper plug in until it clicks into place. This mechanically locks the module to the fin bolt ***(see Figure 15)***. The module keeper plug can be removed by pulling on its stem.

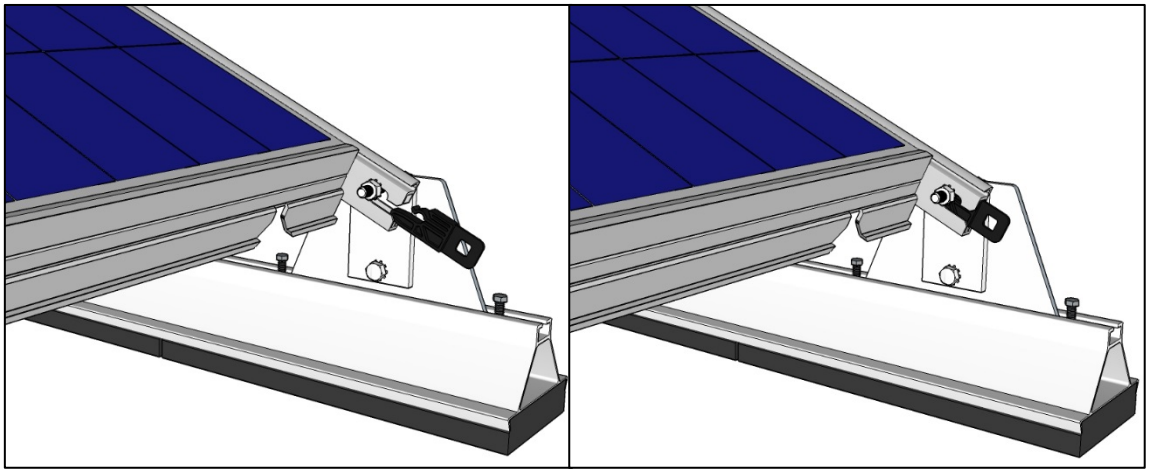

Figure 15

With the keeper plugs installed, torque the nuts that secure the module to the fins to 11.5 ft-lbs.

Do not torque these nuts until keeper plugs are installed. It will crush the module frame and void the system's warranty.

Proper tightening of these nuts is essential for structural integrity and for proper electrical grounding. Failure to install the keeper plugs, or to torque the bolts and nuts connecting the module to the fins to 11.5 ft-lbs will void the system's warranty.

Build Out the Array

Repeat the installation process as described in the previous steps. It is advised to build the complete front row first and then to add subsequent rows. When adding a module pair alongside an existing module pair, it may be necessary to tap the tapered peak pin from the first pair with a hammer or mallet to push it through the holes in the frames of all four modules. Once through, add a second hairpin cotter **(*see Figure 16*)**.

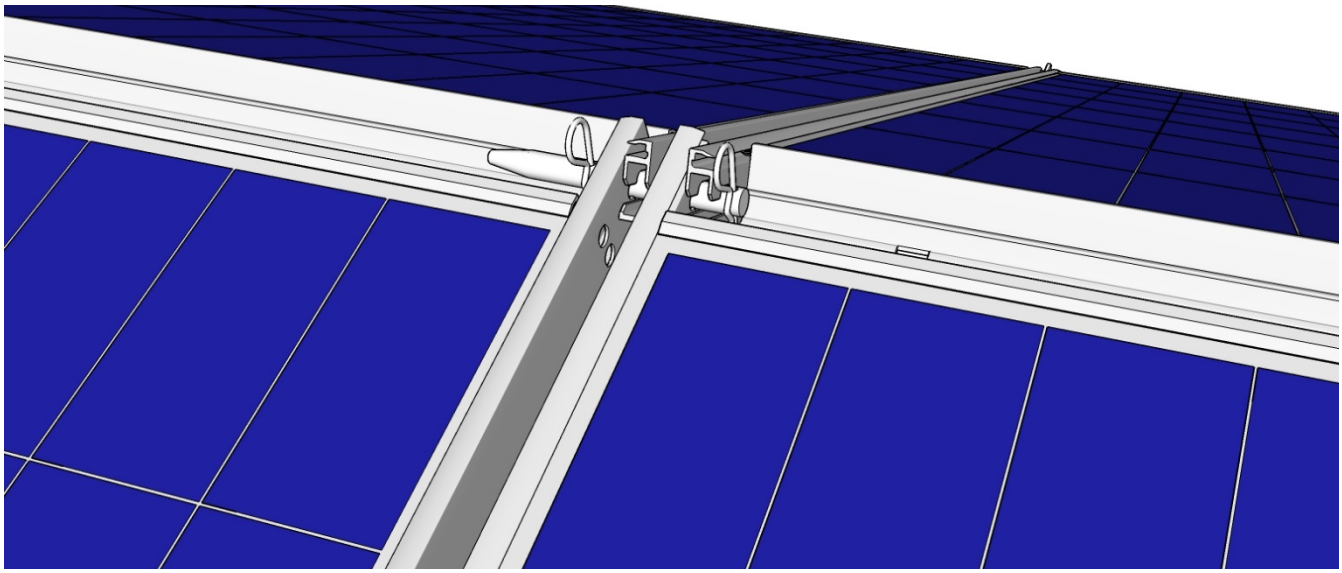

Figure 16

To build out subsequent rows toward the back of the array, use the standard length rails (102 ⅜") and tall fins except at the back (northernmost) row. For the back row use the longer rails (107 ½") ***(see Figure 17)***.

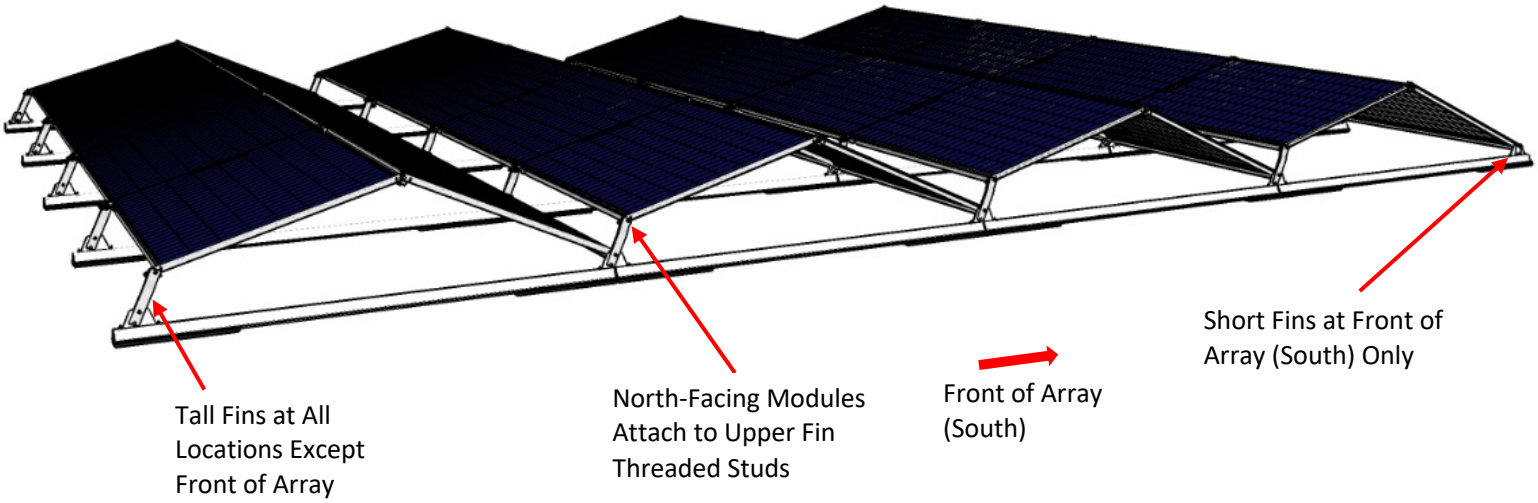

Figure 17

Note: If a "notch" in the front or rear of an array is required to avoid roof obstructions, and if it is more than one module wide, use a longer front/rear rail instead of a standard rail ***(see Figure 18)***. If the notch is in the front of the array, use a short fin. If the notch is in the rear of the array, use a tall fin. This same logic can be applied to areas in the middle of the array where module pairs need to be omitted.

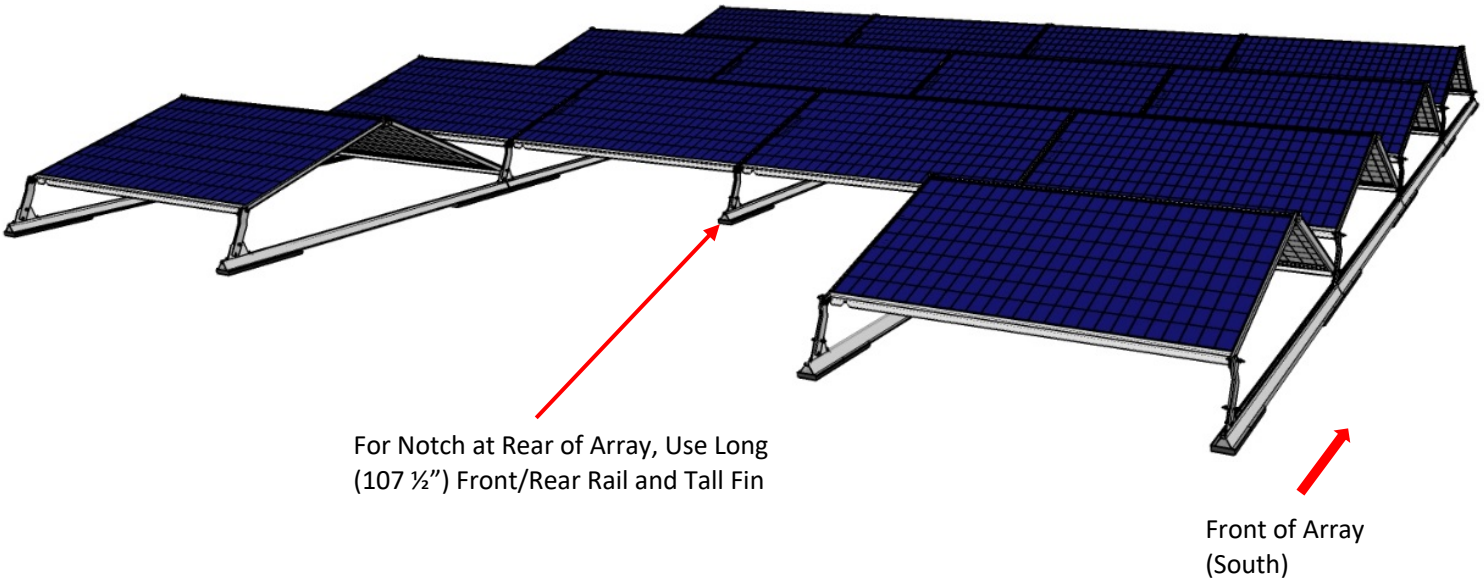

Figure 18

Electrical Installation

Install Inverter Bus

The Global RAIS® Inverter Bus mounts across two adjacent rails under the tent formed by two modules. The inverter bus should be installed only on the array's perimeter or immediately adjacent to an aisle in order to provide access to the DC distribution box.

The DC distribution box is located at one end of the inverter bus. Install that end outboard for easy access. **Thus the DC distribution box will face forward (south) when the inverter bus is on the west side of the array and will face rearward (north) when the inverter bus is on the east side of the array.**

In either case, place the inverter bus so as to maximize the working room on the DC distribution side of the inverter bus, and to ensure that the inverter bus is not directly under the gap between the modules where they come together at the peak. On the **west side** of the array, this means placing the foot of the inverter bus bracket **41 ½"** from the rear end of the rail ***(see Figure 19)***. **On the east side of the array the dimension from the rear of the rail to the bracket will be 57 ½".**

It is advised to install the inverter bus prior to installing the module pair that will cover the inverter bus.

Note: Be sure an extra roof pad is installed on each rail below the inverter bus mounting brackets.

Set the inverter bus bracket feet on the two rails that will carry the inverter bus. Insert two $^{5}/_{16}$"-18 x 1" t-bolts into each rail and slide them into the slots on the inverter bus bracket feet (t-bolts and their combo nuts will be found inside the DC distribution box on the inverter bus assembly). Install a $^{5}/_{16}$"-18 combination star washer and hex nut on each t-bolt and torque to 11.5 ft-lbs. Once the inverter bus has been installed, install the module pair that will cover it.

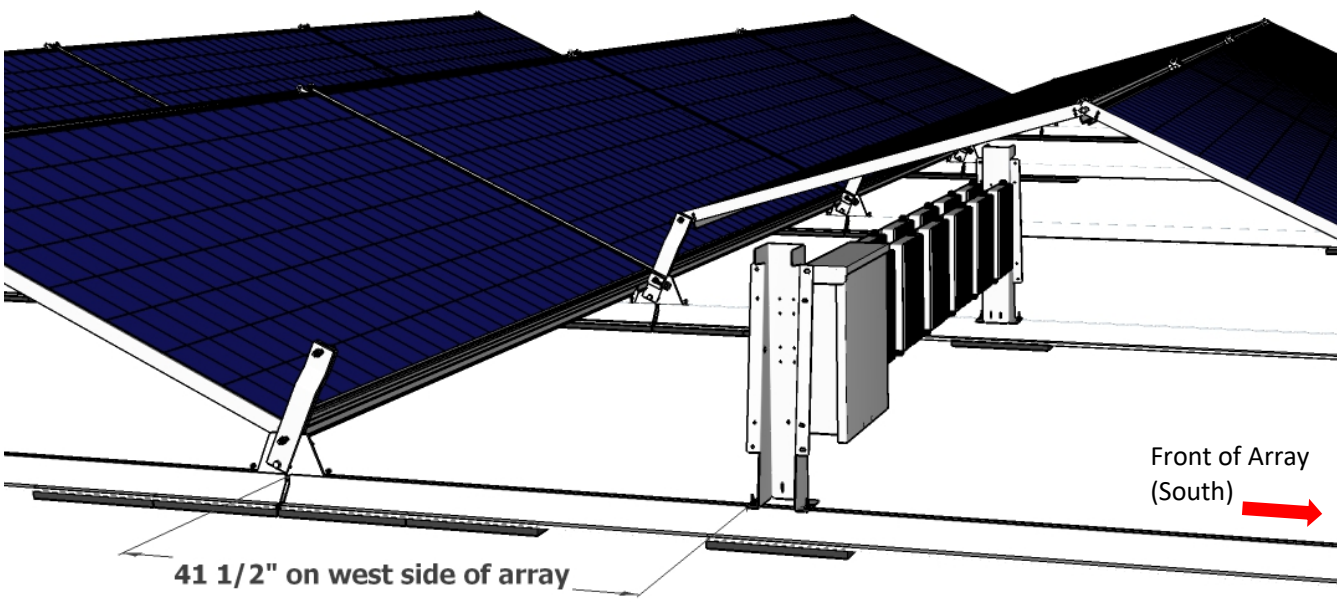

Figure 19

Install DC Conductor

The design of a Global RAIS® system does not require string computations (e.g. open-circuit voltage and short-circuit current) as does a traditional serially-connected system, as the Global RAIS® module's output is voltage-regulated and current-limited. All modules are connected in parallel; 2 AWG copper or aluminum conductors are required.

The maximum current output of the module, shown on the module's label, is not dependent on environmental and illumination conditions. It is a hard limit and will never be exceeded. Thus, by using 1) the appropriate ampacity of the 2 AWG wire selected (dependent on the environmental exposure) and 2) the maximum current output rating of the module, the maximum number of interconnected modules may be determined using the methods outlined in the National Electric Code or other applicable codes.

CAUTION! Do not connect Global RAIS® modules in series! They may only be connected in parallel.

CAUTION: There are no serviceable parts in the Global RAIS® module; any attempt to open the module system will void the initial and power warranties.

In North America, only the following DC conductor types are approved for use with the Global RAIS® Module:

- Alcan 2AWG Compact STABILOY AA-8030 AL Series XLPE 600 V USE-2 or RHH or RHW-2 SUN-RES, Black
- Southwire AlumaFlex 2AWG aluminum alloy AA8176, XLP insulated, USE-2 Black, or White
- Priority Wire 2AWG AL AA-8000 XLPE 600V USE-2 or RHH or RHW-2 Sun Resistant, Black, or Black with White Stripe
- Encore Wire 2AWG Copper conductor, Cross-linked polyethylene (XLPE) XHHW-2/RW90, Black

No other conductors may be used. Global RAIS® can supply approved conductor if preferred.

The Global RAIS® module features insulation displacement connectors that allow the 2AWG conductor to be connected to the module without stripping the insulation. For the first module on a circuit (the one on that circuit furthest away from the inverter bus), place an end cap over the end of the approved conductor ***(see Figure 20).***

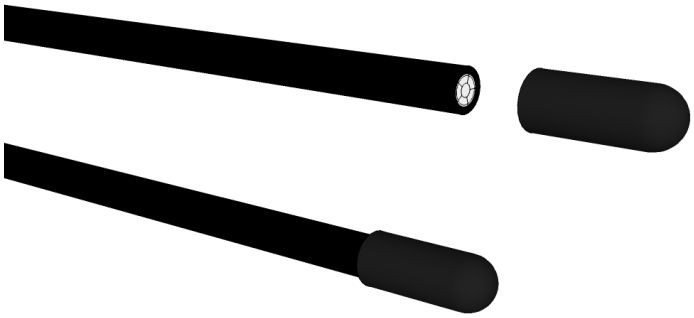

Figure 20

The module's electronics housing clearly marks the positive and negative terminals. There are also corresponding markings on the terminal caps that come attached to the housing. For each branch circuit, the positive terminals of all modules in the branch get wired together with one conductor, and all of the negative terminals get wired together with a second conductor. Note that this is unlike conventional PV module strings. (Refer to your DC wiring plan for branch design.) Be sure to keep track of which conductor is positive and which is negative—they should not be interchanged at the combiner box. Also, if you run more than one circuit together, do not interchange pairs of conductors. The positive and negative of each circuit must be connected to the same bus in the DC combiner box. Failure to follow these instructions will result in no generation from that branch.

To connect the conductor to the first module, lay the conductor into the lug opening, leaving the end cap one to two inches outside of the lug opening. Be sure that the wire is lying flat within the boundaries of the wire channel in the plastic housing ***(see Figure 21).***

Using a $^{3}/_{16}$" hex key, tighten the set screw so that it just makes contact with the conductor's insulation ("finger tight"). Then tighten the set screw 3 ¼ turns. Wait at least 10 seconds, then tighten the set screw ¼ turn more. This is equivalent to torqueing the screw to 9.5 ft-lbs. Tip: use a marker to put an index mark on the set screw so that you can easily count the turns.

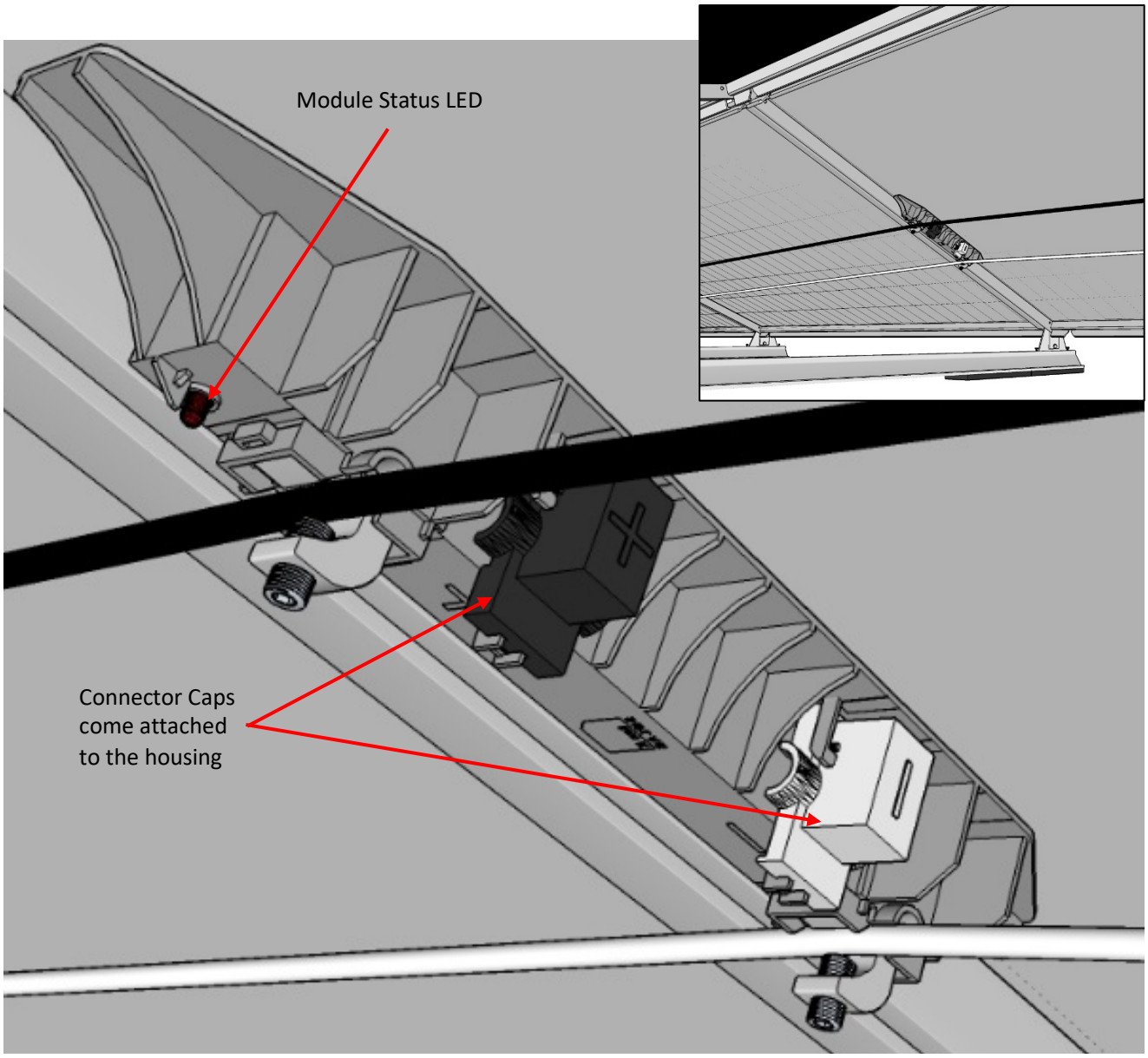

Figure 21

After the set screws have been properly tightened, install the connector caps. The connector caps come attached to the electronics housing ***(see Figure 21).*** **Pull each connector cap away from the module and snap it onto the housing over the appropriate positive or negative terminal.** Note that the caps are prefilled with silicone gel. Align the cap over the lug assembly and snap into place, aligning the tabs with the slots. The caps can snap onto the housing over the connectors in only one way. Repeat the above steps for the other connector. **Both positive and negative connectors must have a sealed connector cap.**

Connect the remaining modules on the circuit using the same method. Leave at least an inch of slack between adjacent east-west connections to allow for a drip loop which will direct rainwater away from the connectors. Install connector caps on all connectors. Make sure that the drip loops of the DC conductors sag downward. Use zip ties or other means to secure the dc conductors where necessary to meet code requirements or to keep the conductors from contacting the roof or other surfaces.

Connect Modules to Inverter Bus

The inverters on the inverter bus will come prewired to each other and to the DC distribution box in the appropriate configuration for your order. To connect the modules to the inverter bus first pry off the DC distribution box door and remove the dead front cover. Make sure all circuit breakers are off. Strip ½" of insulation off the ends of the positive and negative conductors of one branch of modules.

Depending on the inverter bus model and the DC wiring plan, there will be from one to four circuits of modules that need to be connected to the DC distribution box. All of the DC conductors should enter through the centermost cord grips on the bottom of the distribution box. Connect the negative conductors to the negative terminal bars on either side of the distribution box. Connect the positive conductors to the lugs on the circuit breaker bus bars, landing each positive conductor on the same side of the DC distribution box as its matching negative conductor. **It is very important to land the positive and negative conductors of a circuit to the same side of the DC distribution box.** Torque both connections to 50 in-lbs ***(see figure 22).***

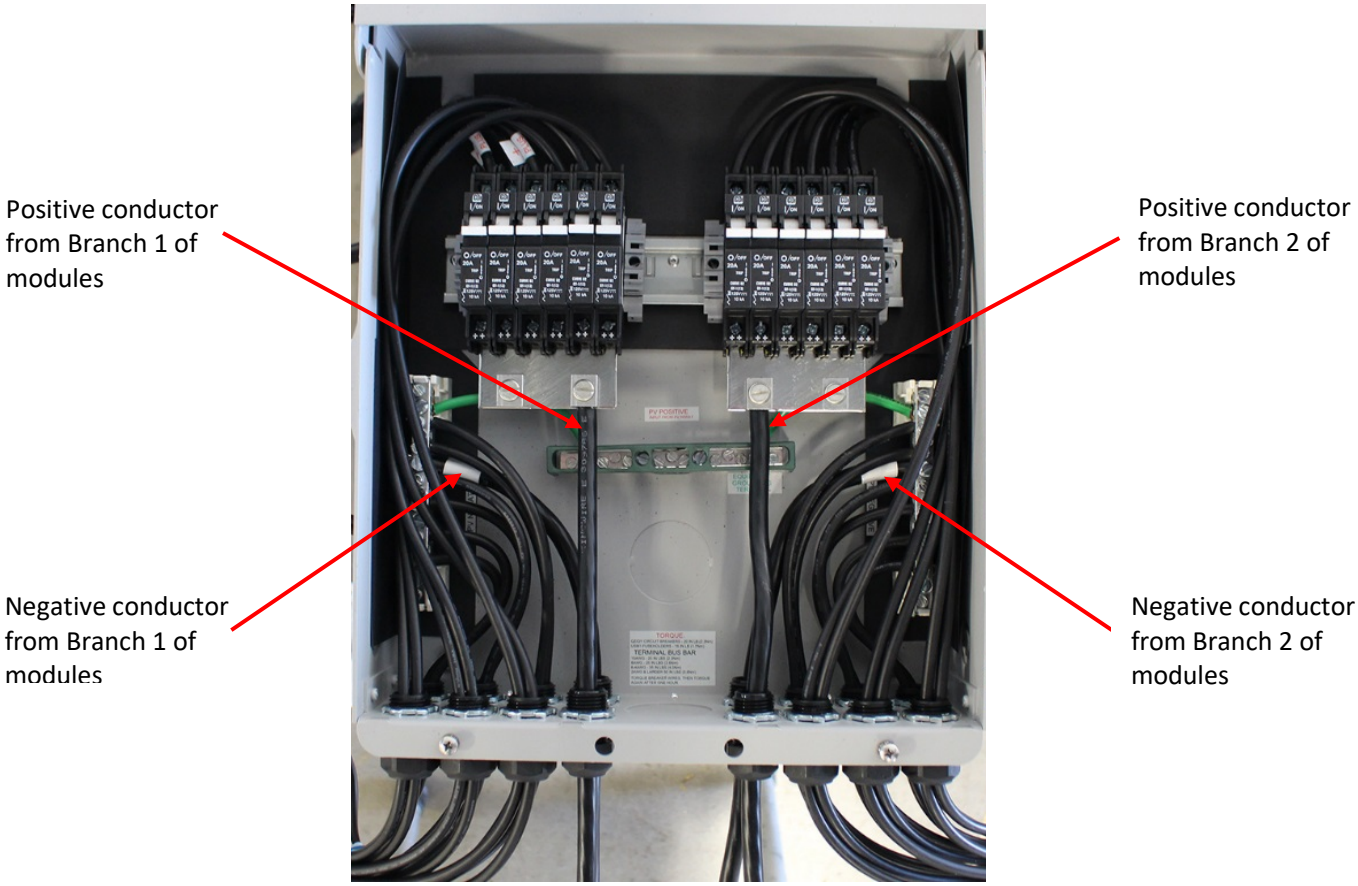

Figure 22

Tighten the cord grips finger tight plus one-half turn. Replace the dead front. You may turn the circuit breakers on at this time, but be aware that the DC voltage will rise to 59 volts and stay there. Replace the cover and secure it.

Install AC Disconnect

An AC disconnect may be required for each inverter bus, or for a group of inverter buses; check your wiring plan for specific locations. The AC disconnect will come with a back plate to be mounted onto one of the inverter bus brackets ***(see Figure 23)***. The AC disconnect will also come with wire whips to connect it to the inverter bus(es) (note: wire whips are not shown on the illustration).

Select the inverter bus on which you will mount the AC disconnect. Attach the AC disconnect's mounting plate to the inverter bus side bracket with four ¼"-20 x ¾" hex head bolts, four ¼" star washers, and four ¼"-20 combination star washers-hex nuts ***(see Figure 23)***. **Be sure there is a star washer on each side of the connection.** Torque the nuts to 6 ft-lbs.

Note: If the AC disconnect will be connected to two inverter buses, install it on the bracket of the northernmost of the two. If it will be connected to three inverter buses, install it on the bracket of the center inverter bus. If it will be connected to four inverter buses, install it on the bracket of one of the two center inverter buses.

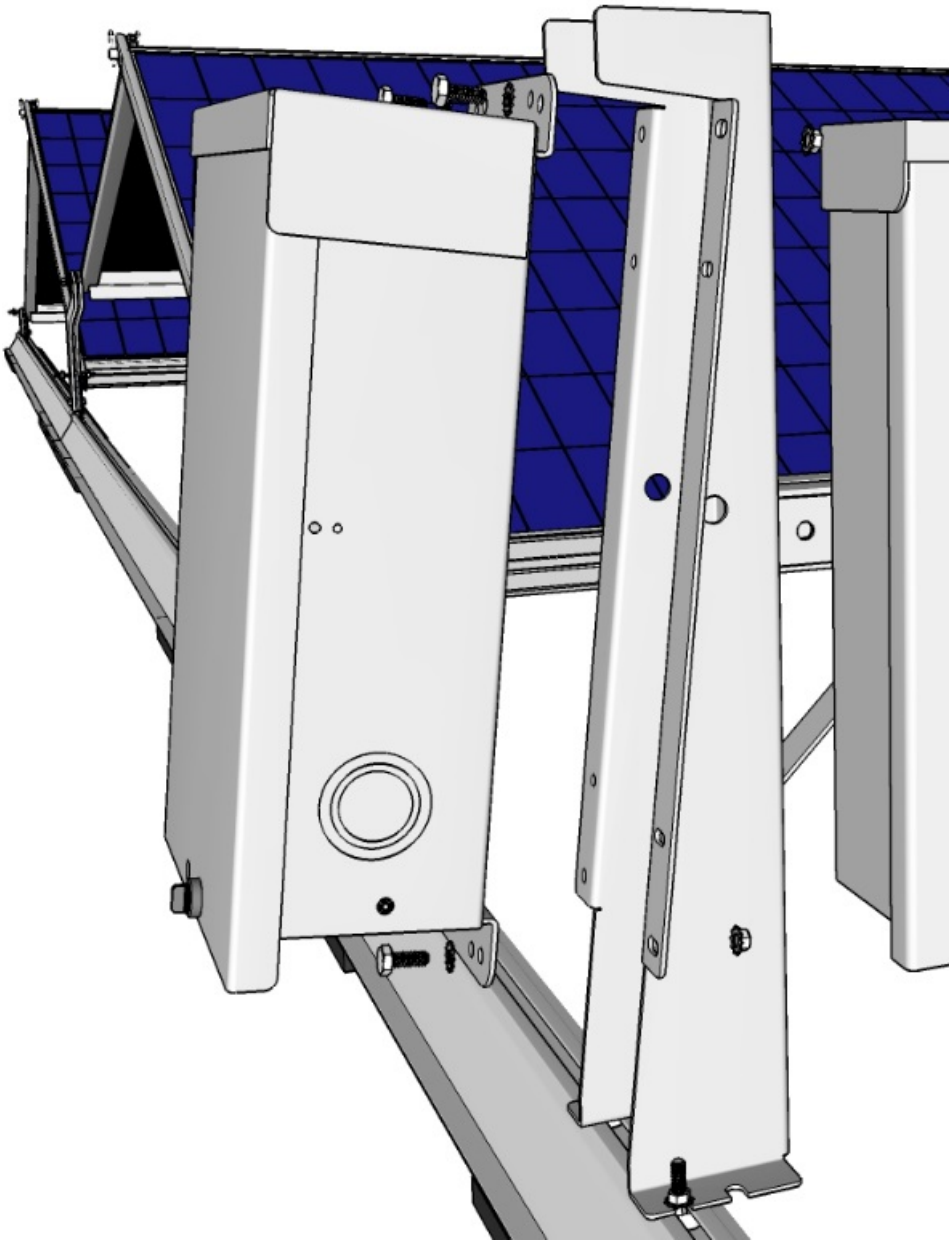

Figure 23

The inverter AC cables are prewired to make chains of inverters. There are two types of AC chains on an inverter bus: complete chains and incomplete chains. The incomplete chains are identified by red tape on the end connectors. Each incomplete chain must be connected to an incomplete chain on an adjacent inverter bus. You can choose either of the red-taped connectors on both inverter buses, and use the supplied bus-interconnect patch cable to make the connections. There will then be two red-taped connectors left (one on each inverter bus); one should be capped and the other should connect to any of the AC disconnect whips.

The complete chains will have connectors without red tape on them. Connect each complete chain to one of the remaining AC disconnect whips. When you are finished, each AC chain should have one end capped and the other end connected to an AC disconnect whip.

If your design does not include the AC disconnects in the kit, you will need to supply your own or use a junction box.

Array Grounding

If the modules, fins, reflector struts, rails and connectors have been installed according the instructions provided in this manual – using appropriate hardware and tightening torque – the entire assembly can be effectively grounded by use of a suitable ground lug attached to one point along one of the rails.

Install Ballast

Determine the required quantity and location of ballast based on the wind loading for your site in consultation with your structural engineer. Verify that appropriate extra rail pads have been installed under ballast locations. Ballast hardware is designed for standard 16" x 8" x 4" concrete blocks.

Install a ballast hook in the rail at one end of the where the block will be placed. Add another at the other end of where the block will be placed. Lay the block onto the ballast hooks. Then insert a ballast hook plate into the notch of each ballast hook. Additional ballast blocks can be installed on either side of the first one, using the other half of the ballast hook as a starting point ***(see Figure 24).***

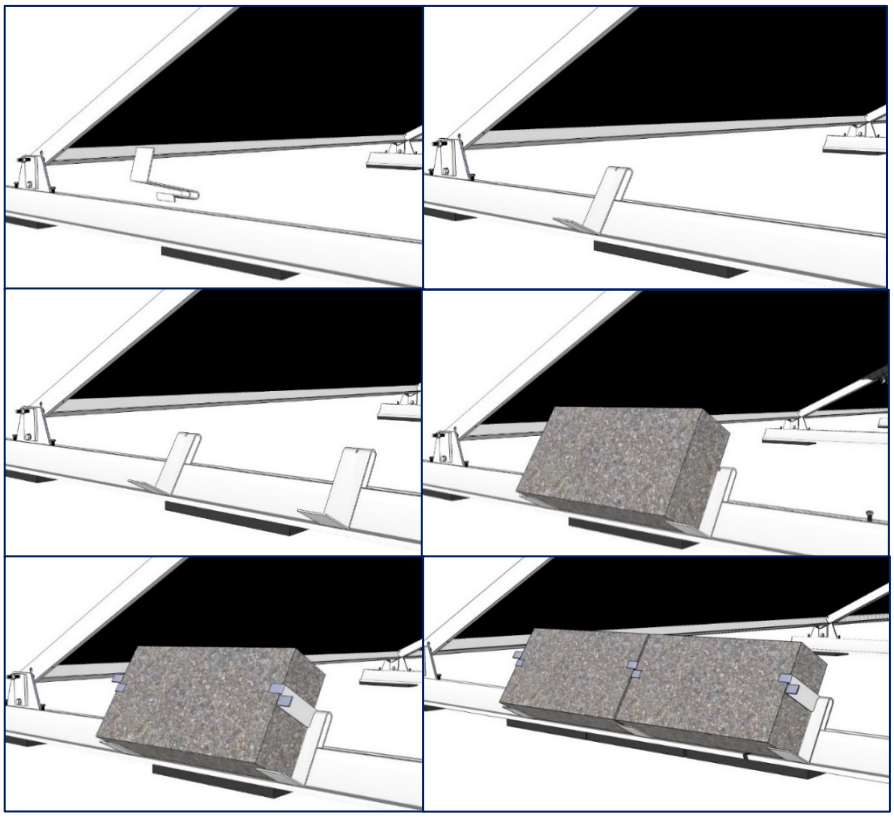

Figure 24

For wavelets that require larger quantities of ballast blocks, use ballast rails to mount the ballast. Construct a ballast tray by placing two aluminum ballast rails across the top of the rails ***(see Figure 25).*** The tabs on the ballast rails will locate them on the array rails to receive the ballast blocks across their width dimension. The ballast rails have double-stick tape on the bottom. Peel the release paper off the tape and locate them on the roof rails.

Ensure that the ballast rails are adhered to the roof rails to ensure the structural integrity of the array.

Place ballast blocks as close as possible to the most outboard rail of the rail pair they span. Should you need more than 220 lbs of ballast under a wavelet, construct a second ballast tray. **Be sure extra rail pads have been installed under ballast locations as indicated in 'Additional Pads" on page 8.**

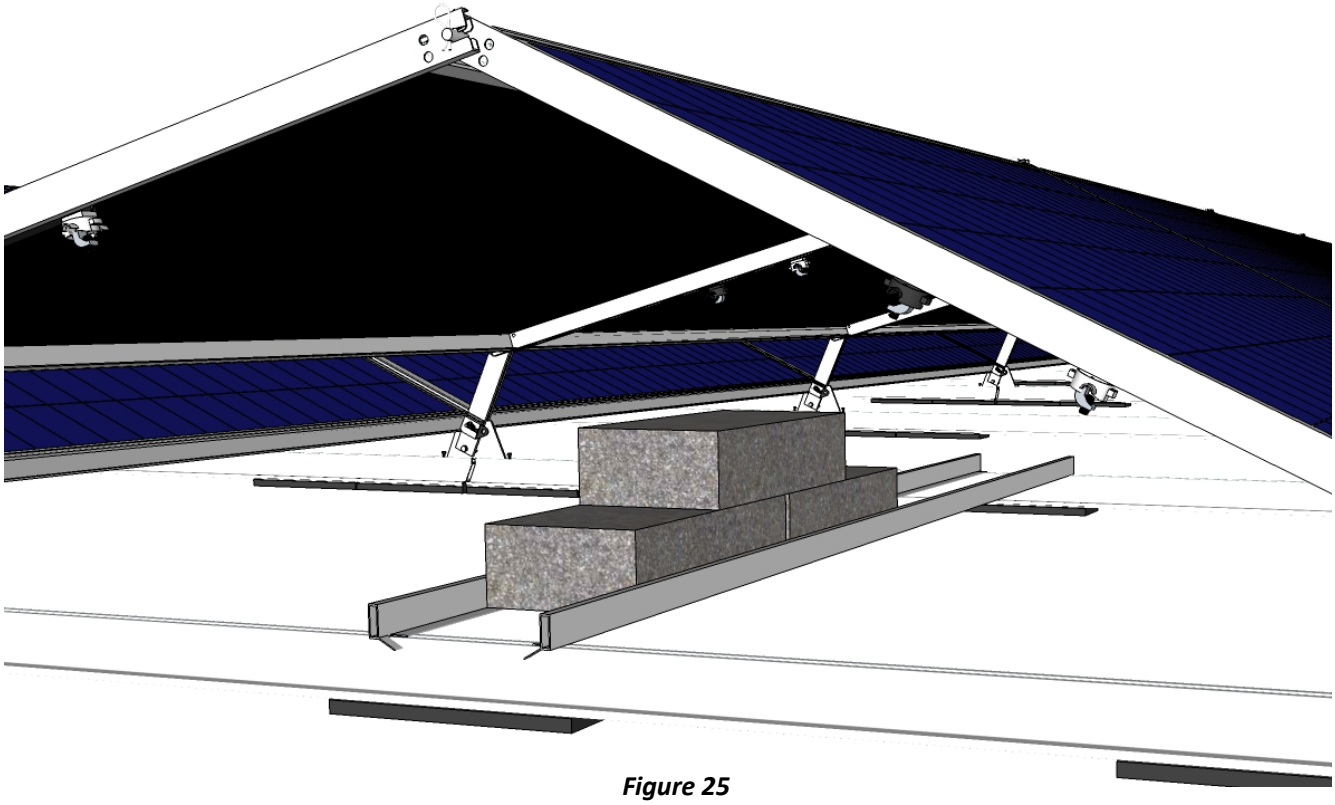

Figure 25

Uneven Roof Conditions

Nominally flat roofs contain small peaks and valleys for drainage, and may also include limited amounts of sag. The DUO system is designed to accommodate these conditions. In the north-south direction there is some give where the rail ends are connected by the fins. To the extent possible, place rail connection points over east-west peaks and valleys.

In the east-west direction the aluminum pin connecting adjacent module-reflector peaks allows the peaks to tip toward each other to accommodate valleys or to splay apart slightly to accommodate peaks. To the extent possible, straddle north-south peaks and valleys.

Larger roof variations may require shimming some roof pads. Use a roof pad as a shim, or cut a roof pad to the needed thickness. **Shims must be adhered to the pad they are shimming with an approved adhesive to ensure that wind loads are properly transferred to the roof.** The approved adhesives are:

- Liquid Nails, Interior and Exterior Heavy Duty Construction Adhesive
- Loctite, PL400 Subfloor Construction Adhesive
- Loctite, PL375 Heavy Duty Construction Adhesive
- Loctite, Clear Power Grab, Instant Grab Heavy Duty Exterior Construction Adhesive
- Loctite, Polyseamseal Caulk+, Indoor/Outdoor All Purpose Adhesive Caulk

Appendix – Module Status LED Sequences

The PV module is equipped with an LED that indicates the module's status. The Titan module has the LED on its front face. The Apex module has the LED on the back, on the electronics housing. The LED will generally "blink" or "wink" in a five second cycle, and the number of blinks/winks within that five second cycle indicates the module's status as shown in the following table. A blink is the LED turning on from an otherwise mostly off state, and a wink is the LED turning off from an otherwise mostly on state.

Be careful not to cast a shadow on the module under inspection while checking the LED.

LED Sequence	Module Status	LED Color *
1 blink	**Normal Operation** – Producing power	Green
2 blinks	**Output Power Reduced/Off** – Operating at max voltage The module is limiting its output current (possibly to 0 A) because the DC voltage measured at this module is approximately 59 V. This state is normal if the inverter or battery has reached its maximum capacity or if the inverter is not connected to AC.	Green
3 blinks	**DC Line Potential Out of Range** (<35V or >60V) – Not producing power This condition is normal if the module is not connected or the DC distribution box is off.	Red
4 blinks	**Ground Fault Detected** – Not producing power If a single module flashes this code, turn off the DC switches in the DC distribution box, wait for one minute, and then turn the switches back on. This should clear the error. If it does not clear the error, contact a Global RAIS® Applications Engineer. Multiple modules indicating this condition suggests a more serious system issue has occurred. Check all wiring for breaks or damage where possible and consult your local electrician or installer if required. Do not contact an Applications Engineer for this condition until the integrity of all wiring has been validated. **CAUTION:** A ground fault occurring on the system represents a potentially serious condition – **DO NOT RESET THE SYSTEM WITHOUT A FULL INSPECTION OF ALL INTERCONNECTIONS AND WIRING.**	Red
5 blinks	**Output Power Off/Reduced** – Insufficient irradiance or partially shaded The module will not produce power while the internal panel voltage is too low, most likely because of insufficient irradiance or the module being partially shaded. Be sure to not shade the module while monitoring the LED.	Yellow
6 blinks	**Over Temperature Protection** – Not producing power The module output current will remain off until the internal temperature drops. Verify the module is clean on the front and the back. If the condition persists, report this to Global RAIS®, but do not remove the module from the system.	Red
1 wink	**Internal Fault** The module will reboot within a minute; contact a Global RAIS® Applications Engineer if the problem persists.	Red
2 winks	**Overcurrent Protection** – Not producing power The output power is off, and the module will reboot within a minute.	Red
3 winks	**Short Circuit Across Module Terminals**	Yellow
7 winks	**Reversed Polarity Connection**	Red

In addition to LED sequences that repeat every 10 seconds, the LED may display in the following manners:

Flashing (½ second on, ½ second off, repeating)	**Power-Up Initialization** – If the module remains in this state for more than 3 minutes, contact a Global RAIS® Applications Engineer.	Yellow
Other	**Contact a Global RAIS® Applications Engineer**, and report the exact LED sequence.	-

* Only the Apex module shows LED sequences in the colors noted. The sequences are the same for both Titan and Apex.

