Global RAIS® DUO Tubular Rail Ground Mount System

Installation Manual

GR UIG 10014.07

Global RAIS® Energy & Storage Solutions
2905 Westcorp Blvd, Suite 213
Huntsville, AL 35805

Phone: (256) 513-9462
www.globalrais.com
info@globalrais.com
@globalrais1

Simply More Energy

About Global RAIS®

Global RAIS® designs, manufactures and markets a unique photovoltaic module that provides unmatched production, reliability and safety.

Copyright Notice

Trademarks and Patents

Disclaimer

Global RAIS® makes no express or implied warranty as to the accuracy, suitability, or completeness of the information provided in its documentation. Global RAIS® assumes no liability for loss or damage which results from the use of such information. Use of this information will be assumed to be at the user's risk. The native language of all documentation is U.S. English. While every effort has been made to ensure the accuracy of this documentation, any translations into other languages cannot be guaranteed for accuracy.

Contact Information

Global RAIS® Energy & Storage Solutions
2905 Westcorp Blvd
Suite 213
Huntsville, AL 35805
USA

Telephone: (256) 513-9462

Email: info@globalrais.com
Website: www.globalrais.com

About Global RAIS Energy & Storage Solutions

Global RAIS provides a photovoltaic solar solution that delivers on the promise of the lowest cost of solar electricity, while at the same time improving power density, safety, longevity and bankability of photovoltaic systems. Since its introduction in 2008 as Ten K Solar, Global RAIS® has been a leading innovator in the delivery and implementation of photovoltaic solar systems for commercial customers. More information about Global RAIS is available online at www.globalrais.com

Contents

Introduction

Welcome to Simply More Energy! The Global RAIS® DUO PV System is a unique approach to solar energy generation that delivers the best value in solar today!

This guide describes the proper installation method of the Global RAIS® DUO System onto a supporting ground structure using the Global RAIS® tubular rail.

The Global RAIS® DUO PV system is designed for flexibility, safety, ease of installation and simple maintenance. Please be sure to follow this instruction guide carefully to meet its design goals. We are happy to partner with you in making the world a cleaner, better place.

Caution: It is important that the installer read through all instructions carefully and layout a project plan prior to beginning physical installation. Any concerns or questions the installer may have should be directed to Global RAIS®. Additional information can be found at www.tenKsolar.com.

Caution: The instructions contained in this installation manual are guidelines. Actual project details and considerations vary greatly. Please consult with your structural engineer and authorities having jurisdiction in order to validate that these guidelines are acceptable for your project installation.

Global RAIS® DUO Ground Mount System Overview

The Global RAIS® DUO Tubular rail Ground Mount System is comprised of Global RAIS® Modules and Global RAIS® Inverter Buses mounted on rails supported by pilings or other ground-penetrating devices, or by non-penetrating piers. Complete details of system assembly are provided in this document.

The Global RAIS® Module is protected by its integrated electronics to only produce energy when the system is safely connected to the grid. The Global RAIS® Inverter Bus provides the system's DC-AC inversion.

In the DUO system, the Global RAIS® Module are installed in a bidirectional wave pattern that offers complete PV coverage of the installation space ***(see Figure 1***). This wave pattern creates a wind shield that adds to the system's structural integrity.

Figure 1

Hardware and Tools

Before installing your Global RAIS® DUO System, make sure you have the recommended tools and hardware.

Global RAIS® DUO Fastening Hardware

Use only specified fasteners with the Global RAIS® DUO system. Replacing the specified fasteners with unapproved fasteners could disrupt the electrical grounding circuit and could result in damage to the panels or reflectors, or to nearby personnel or property.

Replacing the specified fasteners with unapproved fasteners will void the warranty.

Description	Locations Used
¼" Star Washer, Stainless Steel	Fin-Rail connection, AC Disconnect-Inverter Bus Bracket connection
¼"-20 X ⅝" Stainless Steel Hex Head Cap Screw	Fin-Rail connection
¼"-20 X ¾" Stainless Steel Hex Head Bolt	AC Disconnect-Inverter Bus Bracket connection
¼"-20 Stainless Steel Combination Hex Nut with Star Washer	AC Disconnect-Inverter Bus Bracket connection
$^{5}/_{16}$"-18 x 1" Stainless Steel T-bolt	Inverter Bus Bracket-Rail connection, Pad Shoe-Rail connection
$^{5}/_{16}$"-18 x 2 ½" Stainless Steel T-Bolt	Pile Cap Clamp
$^{5}/_{16}$"-18 x 2" Stainless Steel Threaded Stud	Fin-Module connection
$^{5}/_{16}$"-18 Stainless Steel Combination Hex Nut with Star Washer	Fin-Module connection, Rail-Pile Connection, Inverter Bus Bracket-Rail connection
Chamfered aluminum pin	Module-Module connection
Hair Pin Cotter	Module-Module connection
Module Keeper Plug	Fin-Module connection
⅝"-11 hex nut, stainless steel	Pile Cap Assembly
⅝"-11 x 1 ¼" hex head cap screw, stainless steel	Pile Cap Assembly
⅝" external tooth star washer, stainless steel	Pile Cap Assembly

Recommended Tools

You will need the following tools for the proper installation of the Global RAIS® DUO System. Additional tools may be required based on your specific site requirements.

Standard Tools
$^{7}/_{16}$" hex socket; ½" hex socket and ½" deep hex socket; $^{15}/_{16}$" hex socket
A torque wrench with an effective working range that includes 12 ft-lbs and a minimum resolution of 1 ft-lb
$^{3}/_{16}$" hex key
Tape measures and levels may be required, depending on the site
Special Tools, available for sale by Global RAIS®
Global RAIS® DUO Fin Spacing Tool - Ensures each fin is placed exactly the correct distance apart.

Ground Penetrating Mounting

It is recommended that the support structure be fully installed prior to delivery of the Global RAIS® System.

The DUO System can be installed on a variety of ground penetrating support structures. The two most common, driven piles and helical piles, will be covered in this manual. Installation on either type of piles is very similar. The only differences are the piles themselves, and the way that the array rails are attached to each type of pile.

One to four wavelets of the DUO system can be supported on one N-S length of tubular rail that will rest on two piles. The ends of the rails will be cantilevered out from the piles. Successive rails to the north or south will rest on another set of two piles. The rails will be separated by 1” north-south.

The support piles of your Global RAIS® DUO PV System must be installed 80 ⅛" on-center in the east-west direction. The north-south spacing and pile depth will be determined by your structural engineer, and must be installed accordingly ***(see Figure 2)***. (Note: Figure 2 shows W6x9 piles, but the dimensions apply to helical piles as well.)

Failure to install piles in accordance with structural engineering report will void system warranty.

Failure to install piles within accepted tolerance guidelines will void system warranty.

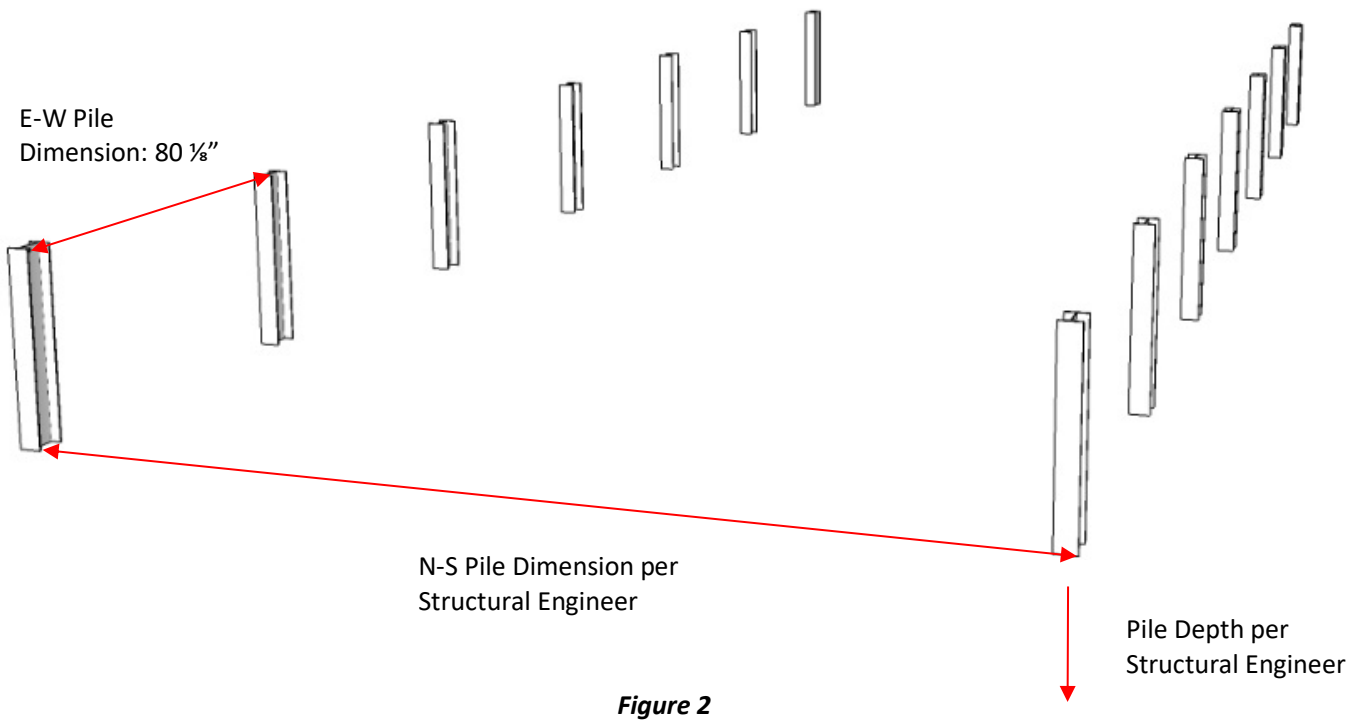

Figure 2

The following table shows acceptable variances in pile positions:

Axis	Installation	Tolerance
East–West	80 ⅛" OC	+/- 2"
North–South	Determined by PE Report	Determined by PE
Height	Determined by PE Report	+/- ½"
Pile	Plumb	5° off plumb
Depth	Determined by PE Report	Determined by PE Report

Driven Piles

If you are using driven H-piles, the flanges of the shape must run north-south and the web must run east-west ***(see Figure 3).***

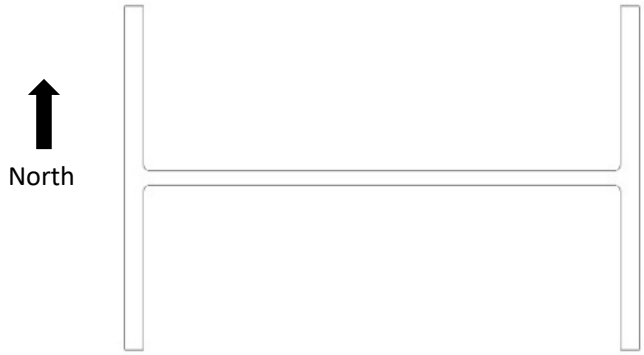

Figure 3

Driven piles require a ¾" diameter hole in the web of the pile for mounting the pile cap. The location of the hole is shown in ***Figure 4.*** The piles should be driven in such a manner that no mushrooming of the top of the piles occurs.

Note: the pile shown in ***Figure 4*** is a W6X9 structural steel member. Your PE may specify a different structural steel member, but hole location will stay the same.

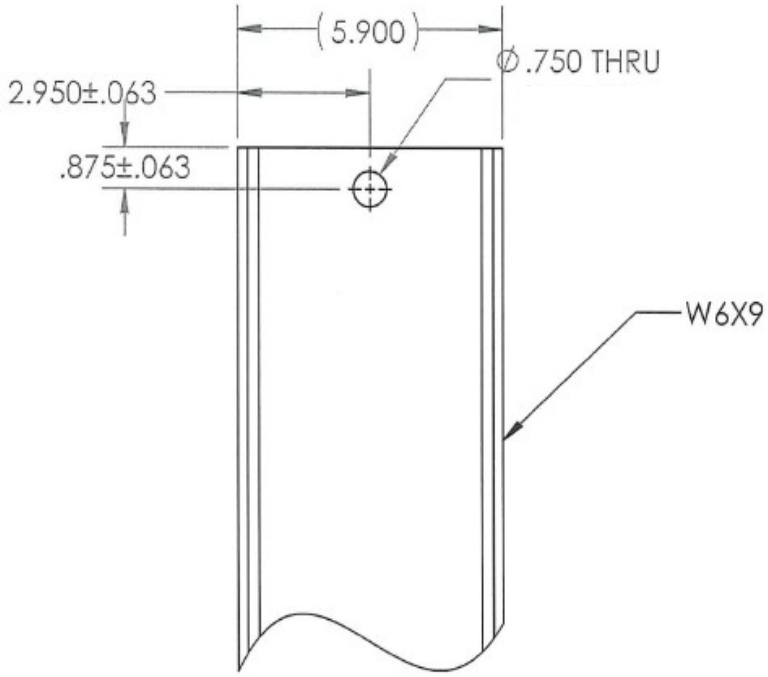

Figure 4

Once the piles are driven, attach a pile cap to each pile using a ⅝"-11 x 1 ¼" bolt, a ⅝"-11 nut and two ⅝" star washers ***(see Figure 5).***

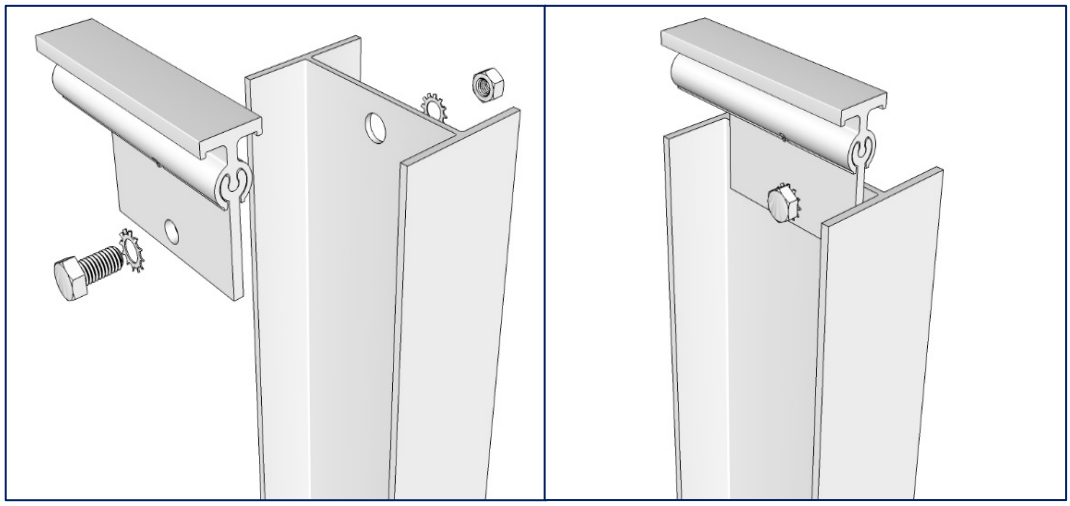

Figure 5

Helical Piles

Helical piles should have integral 8" x 8" x ½" steel mounting plates on the top of each pile. These mounting plates will provide a level surface for the DUO System's rails to install on. ***See Figure 6*** for typical helical pile.

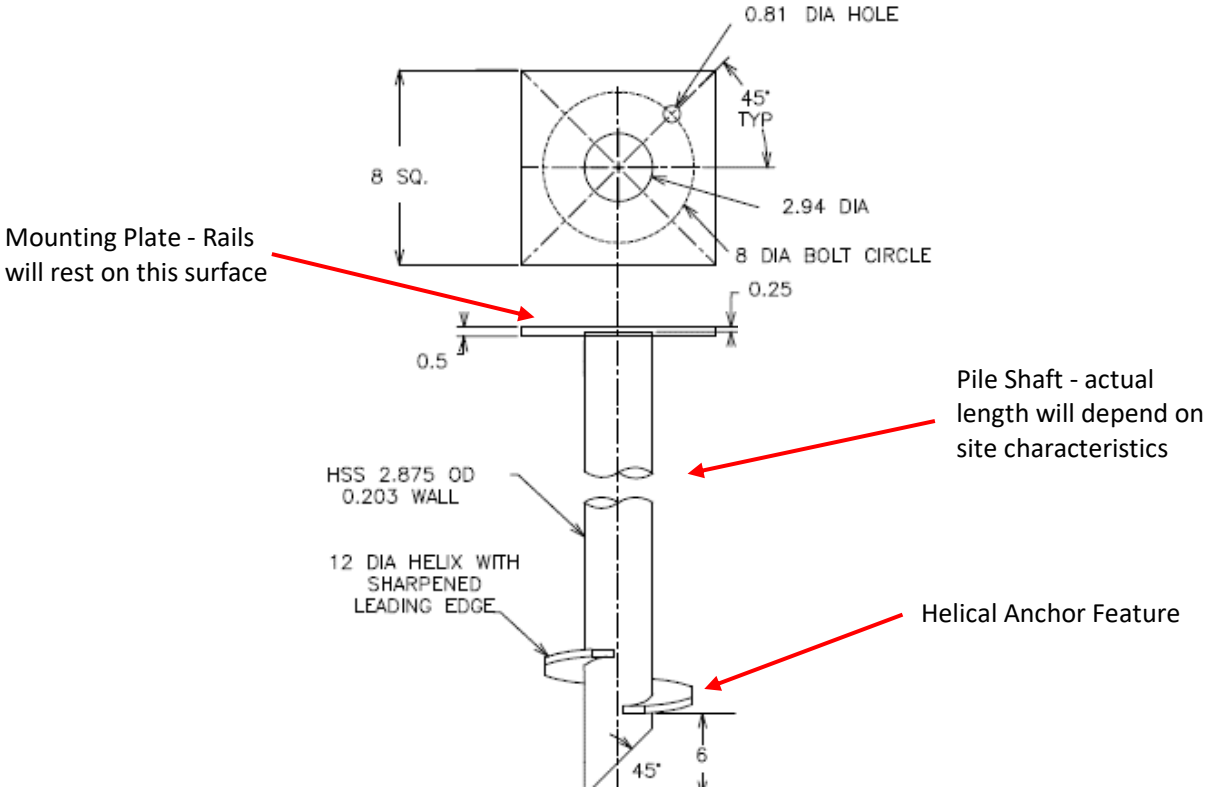

Figure 6

Non-Ground Penetrating Mounting

Pre-cast concrete piers can be used in place of pilings for non-ground penetrating requirements. The pre-cast piers must be positioned in the same locations that pilings would be in ground penetrating arrays. The pre-cast pier must be installed 80 ⅛" on-center in the east–west direction. The north–south spacing will be determined by your structural engineer ***(see Figure 2).*** Note that this manual will show mounting on driven piles. With the exception of the way rails are connected to the supporting system, the installation is the same for all support systems.

Mechanical Installation

Install Rails

To install the first oval rail, set the rail on top of the first two piles on either the eastern or western edge of your array.

- On driven piles, the rail will rest on top of the pile caps that you installed on the piles.
- On helical piles, the rail will rest on the pile manufacturer's 8" x 8" x ½" top plate.
- On non-penetrating pre-cast piers, the rail will rest on the pre-cast pier with rubber pads and pad shoes between the rail and the piers.

Position the front of the rail so that its cantilever length is in accordance with your structural engineer's specifications.

On Driven Piles

Insert a $^{5}/_{16}$"-18 x 2-½" T-bolt into the rail's bottom channel. Slide a universal clamp over the T-bolt and thread a $^{5}/_{16}$"-18 combination star washer-hex nut onto the T-bolt and finger-tighten. For driven piles, use one clamp. It can be on either side of the pile cap ***(see Figure 7).***

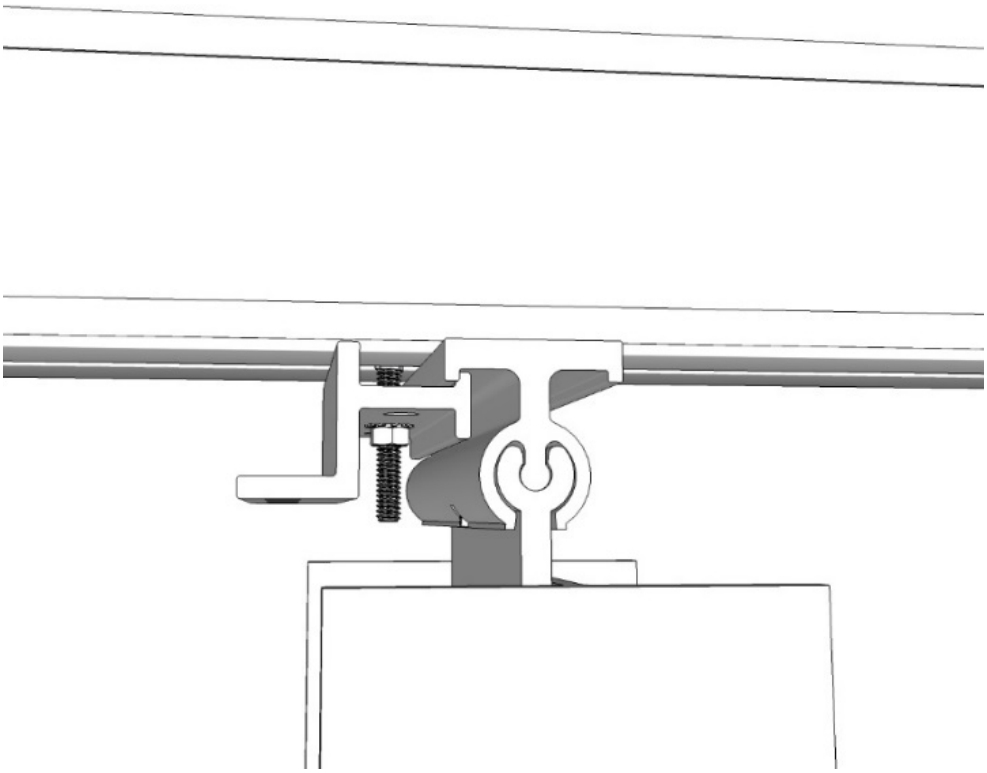

Figure 7

On Helical Piles

For helical piles, use **<u>two</u>** clamps, one on each side of the pile's top plate ***(see Figure 8).*** Note: The universal clamp may be oriented one of three ways to accommodate helical piles that are out of plumb or with top plates not aligned with the direction of the oval rail.

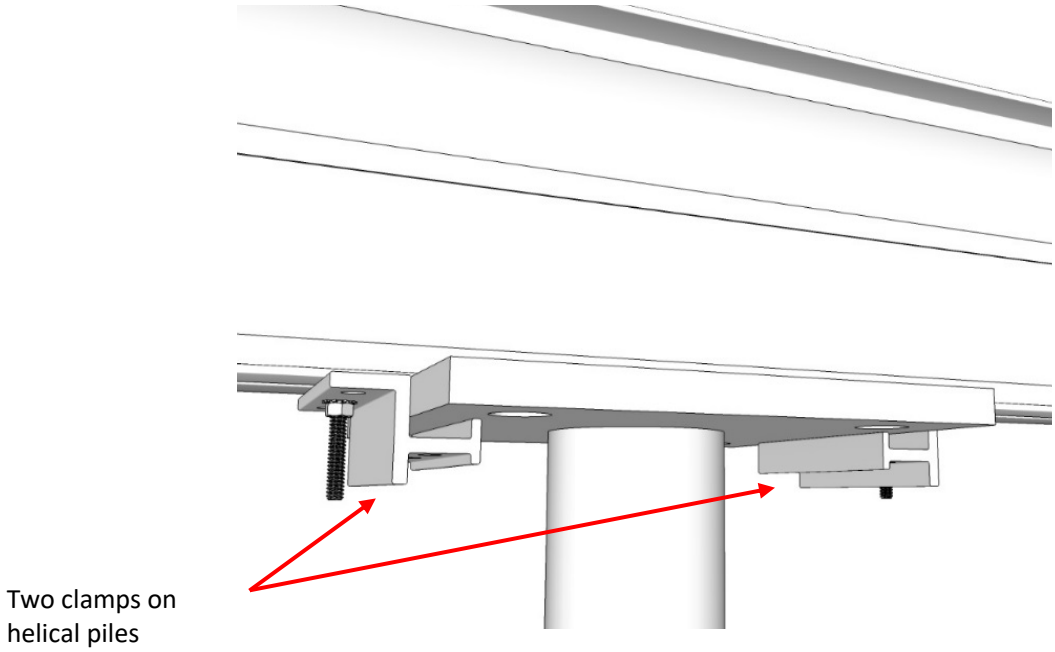

Figure 8

On Non-Penetrating Pre-Cast Piers

For non-penetrating pre-cast piers clamping options will depend on your design for the pier. The rail rests on two rubber pads, each inserted in a pad shoe, on each pre-cast pier ***(see Figure 9).*** Place a pad shoe with a pad at the front and rear of each pier so that the tab on the inboard end of the shoe fits into the rail's bottom slot. Twist a $^{5}/_{16}$"-18 x 1" hammer head bolt into the rail slot and slide it into the slot on each pad shoe's tongue. Install a $^{5}/_{16}$" flat washer and a $^{5}/_{16}$"-18 combination star washer and hex nut on to each hammer head bolt. Tighten the nut to 6 ft-lbs.

Clamp the rail in position using the clamping system you have designed for you pier.

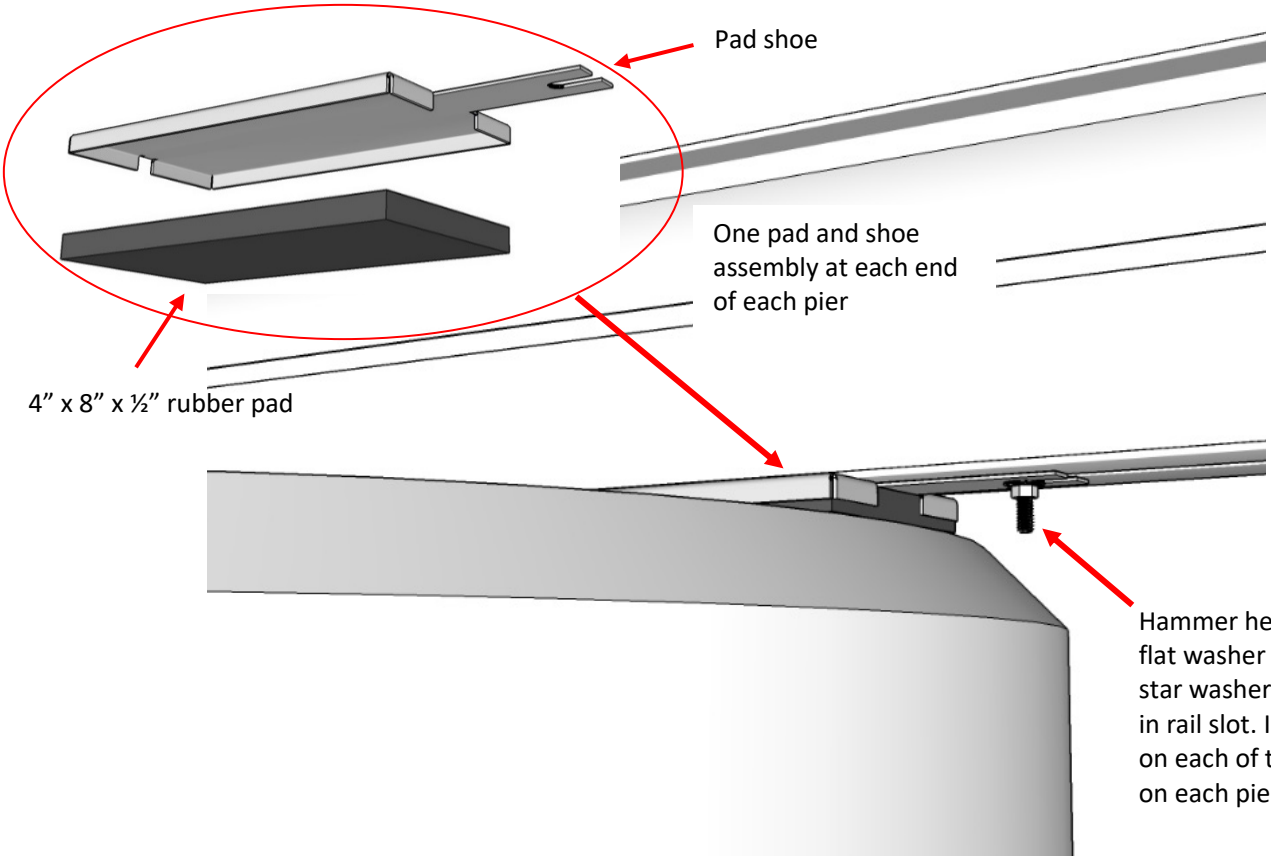

Figure 9

With whichever support system you are using (driven piles will be illustrated in this manual), repeat these steps for the rail's other pile. Once the first rail is properly positioned, verify that it is aligned such that the other rails, when spaced at multiples of 80 ⅛" on center from the first, will sit properly on their piles or piers. Then torque the nuts on the first rail's clamp T-bolts to 11.5 ft-lbs.

Install the remaining rails in the section, spacing them at 80 ⅛" on center. Use a line or laser to **keep the front edges of the remaining rails aligned and square to the first rail *(see Figure 10).***

Only finger tighten the nuts on the clamp T-bolts of the other rails for now.

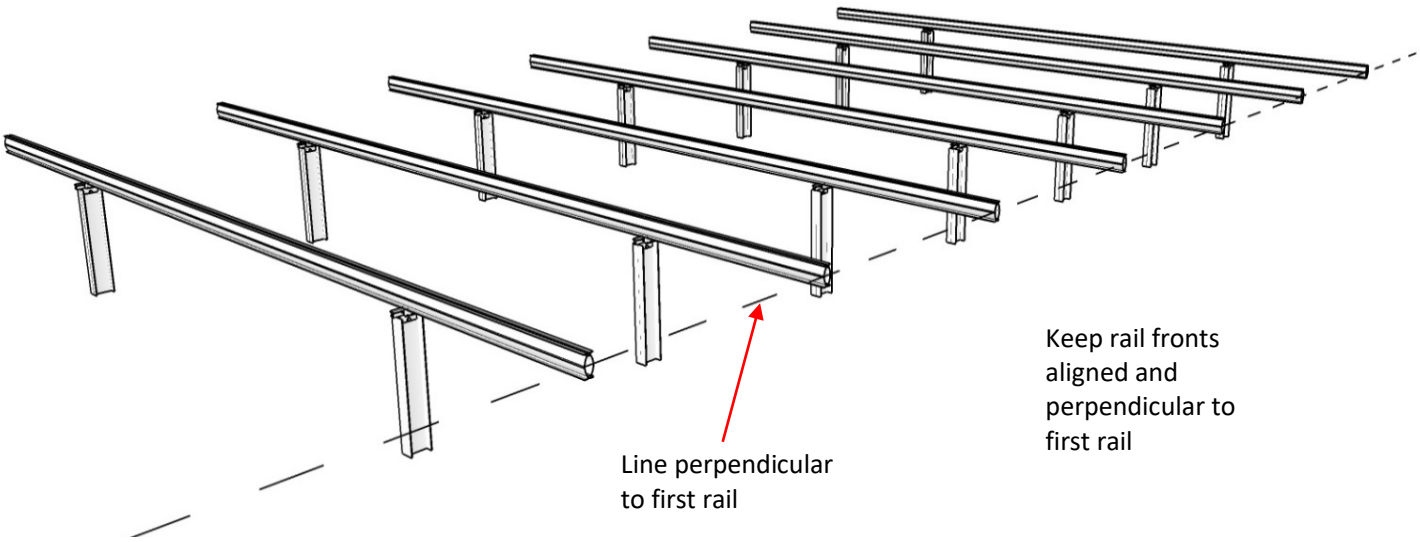

Figure 10

Install Fins

The fins connect the modules and reflector struts to the rails. The DUO System uses two different fins to attach modules to rails ***(see Figure 11)***. **The short fin is used only at the front of each rail for tubular rail installations.** The tall fin is used in all other locations. They come pre-assembled with necessary hardware as shown. Note that the tall fin tips toward the front (south) of the array.

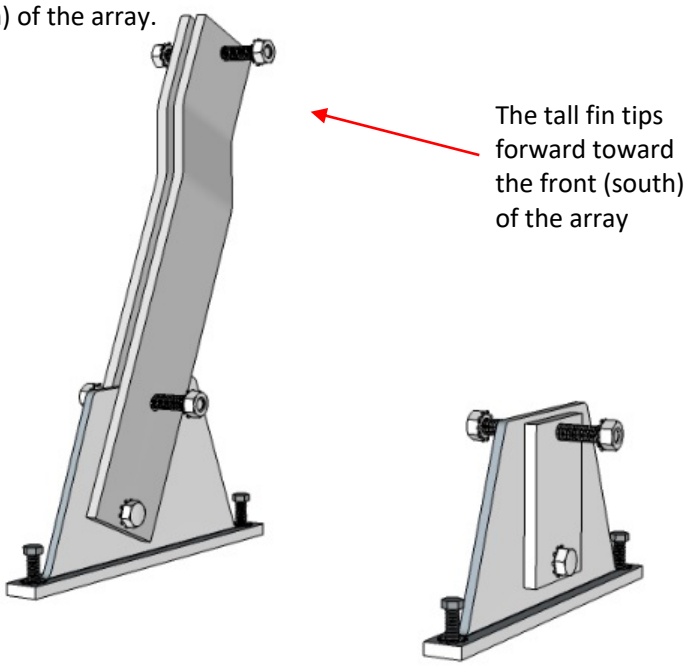

Figure 11

Slide the necessary number of fins – one more than the number of modules that will be carried by the rail – into each rail. **Use short fins at the front of each rail, and tall fins for all other locations.** Allow the star washers to slide into the rail with the fin base plates ***(see Figure 12).*** **The star washer is an integral part of the electrical grounding system and must be installed inside the fin-slot.**

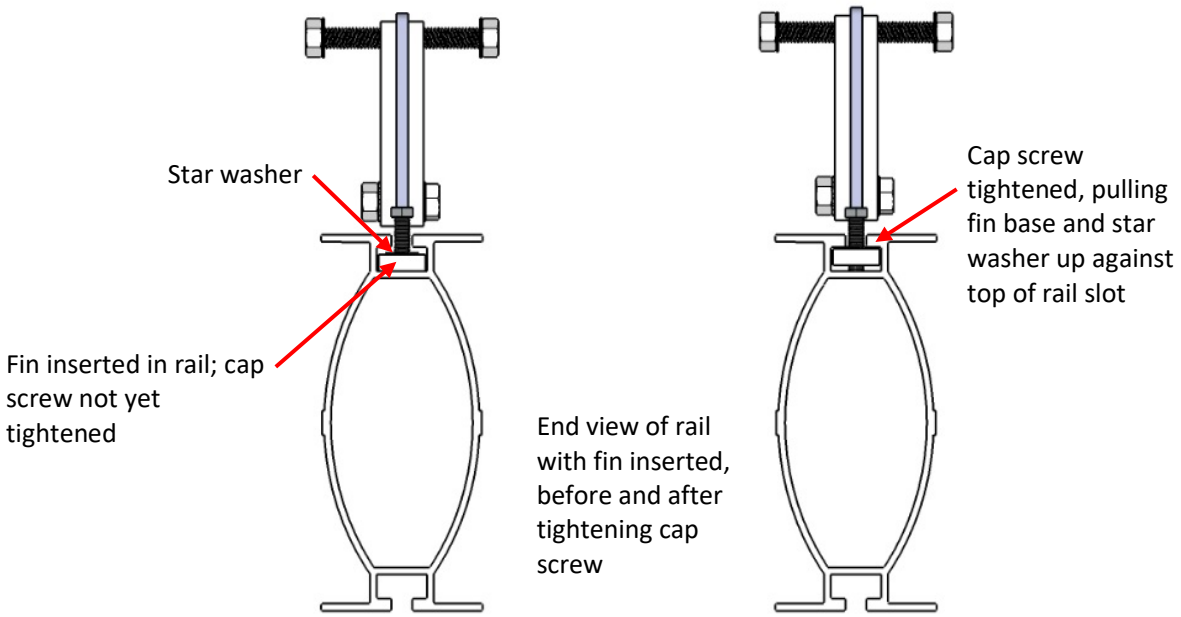

Figure 12

Keeping the front edge of the rails aligned and square to the securely clamped rail, align the fronts of the bases of the short fins with the fronts of the rails. Torque the cap screws of the short fins to 6 ft-lbs ***(see Figure 13).***

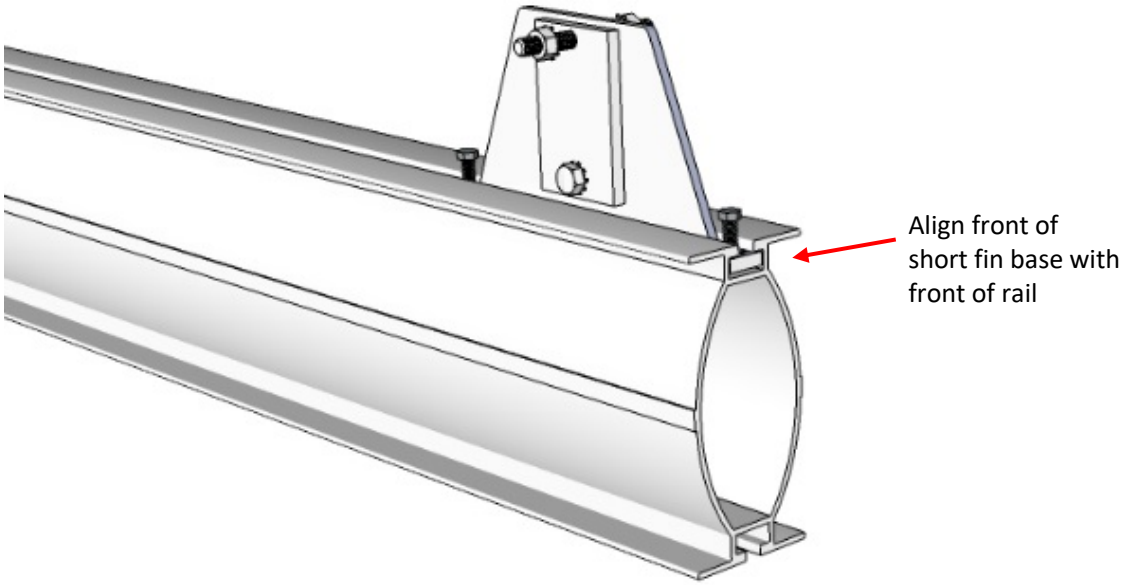

Figure 13

Once the front fins on all rails have been properly located and torqued to 6 ft-lbs, use the fin-spacing tool to position the subsequent (tall) fins on each rail. Place the notches in the fin spacing tool over the threaded studs on the fins to locate the next fin ***(see Figure 14).*** Once a fin has been positioned with the fin spacing tool, torque its cap screws to the rail to 6 ft-lbs. Then use that fin and the fin spacing tool to locate the next fin back. Continue the process until all fins on each rail are properly located and torqued.

Note: Assemble the fin spacing tool for 102.76” wave pitch per the instructions attached to it. The fin spacing tool has two notches on one end. Use the outer notch for spacing all fins for the DUO tubular rail ground mount system.

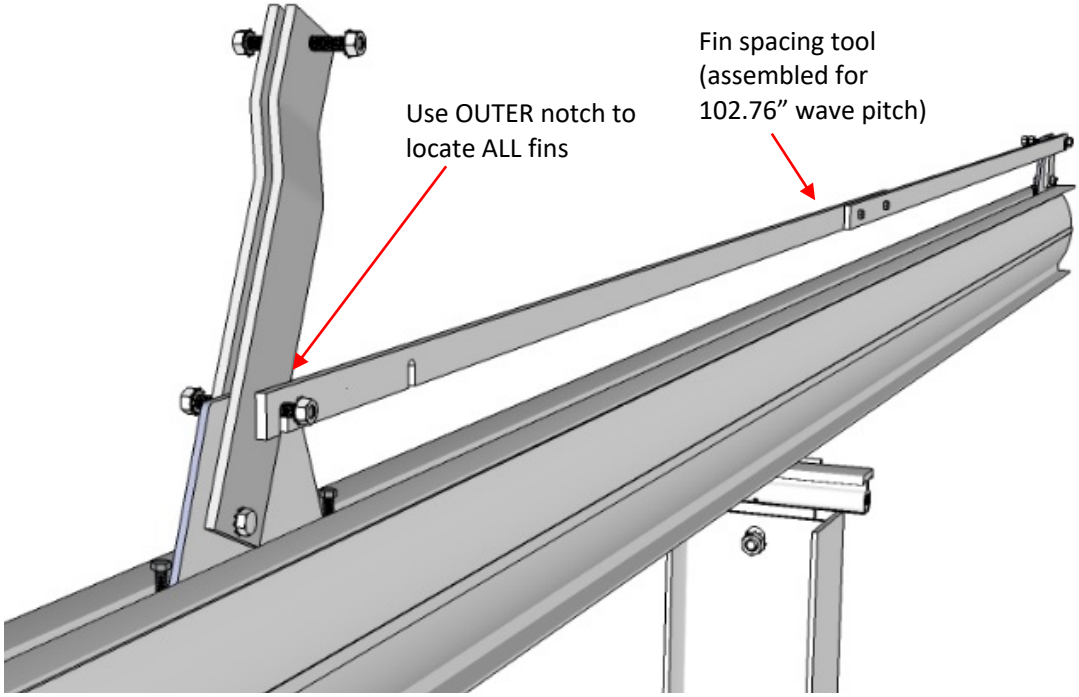

Figure 14

Install Modules

When placing the module on the fin bolts, orient the module with the electrical connector lugs to the east or west, per your wiring plan. Generally it is best to keep the lugs on modules on the perimeter of the array on the inboard side. Slip the slots in the first (south) module’s frame over the stud bolts on the front (short) fins ***(see Figure 15).*** Be sure that the dog-leg slot in the module frame sits properly on the fin stud bolt ***(see Figure 16).*** **Only finger tighten the nuts on the fin studs for now.**

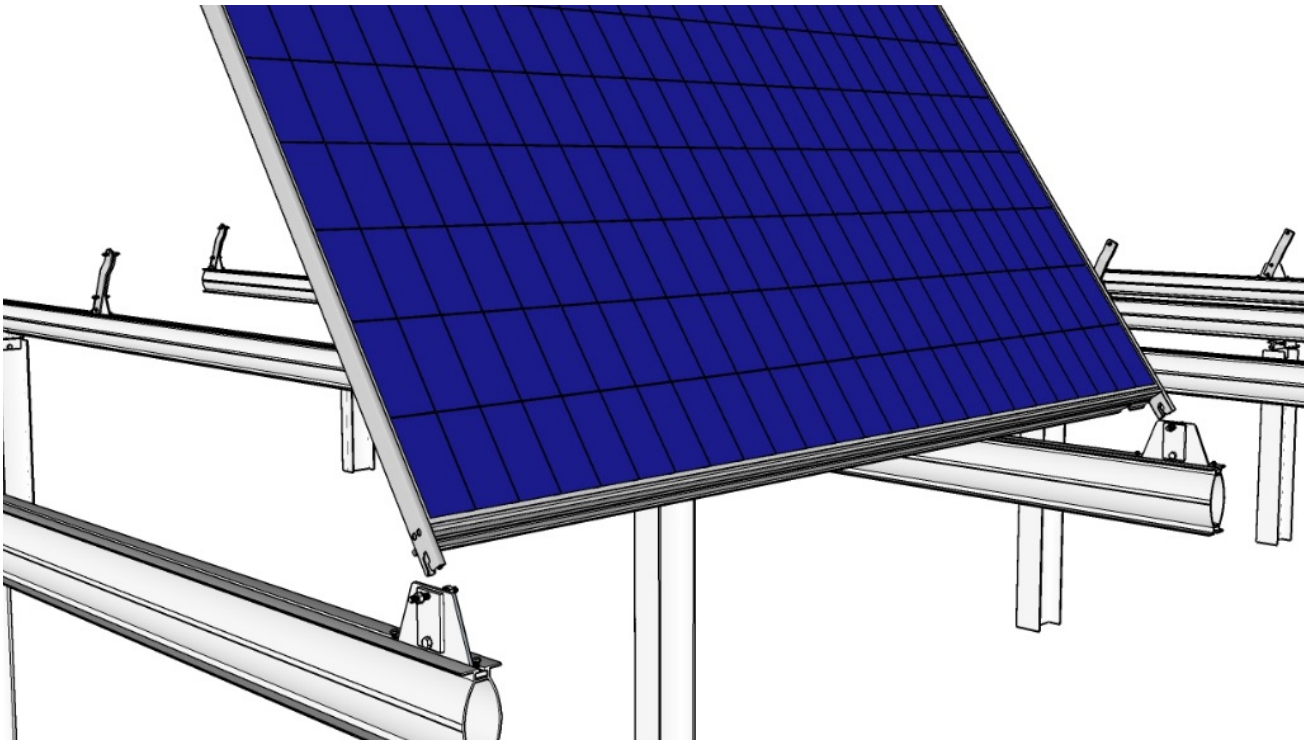

Figure 15

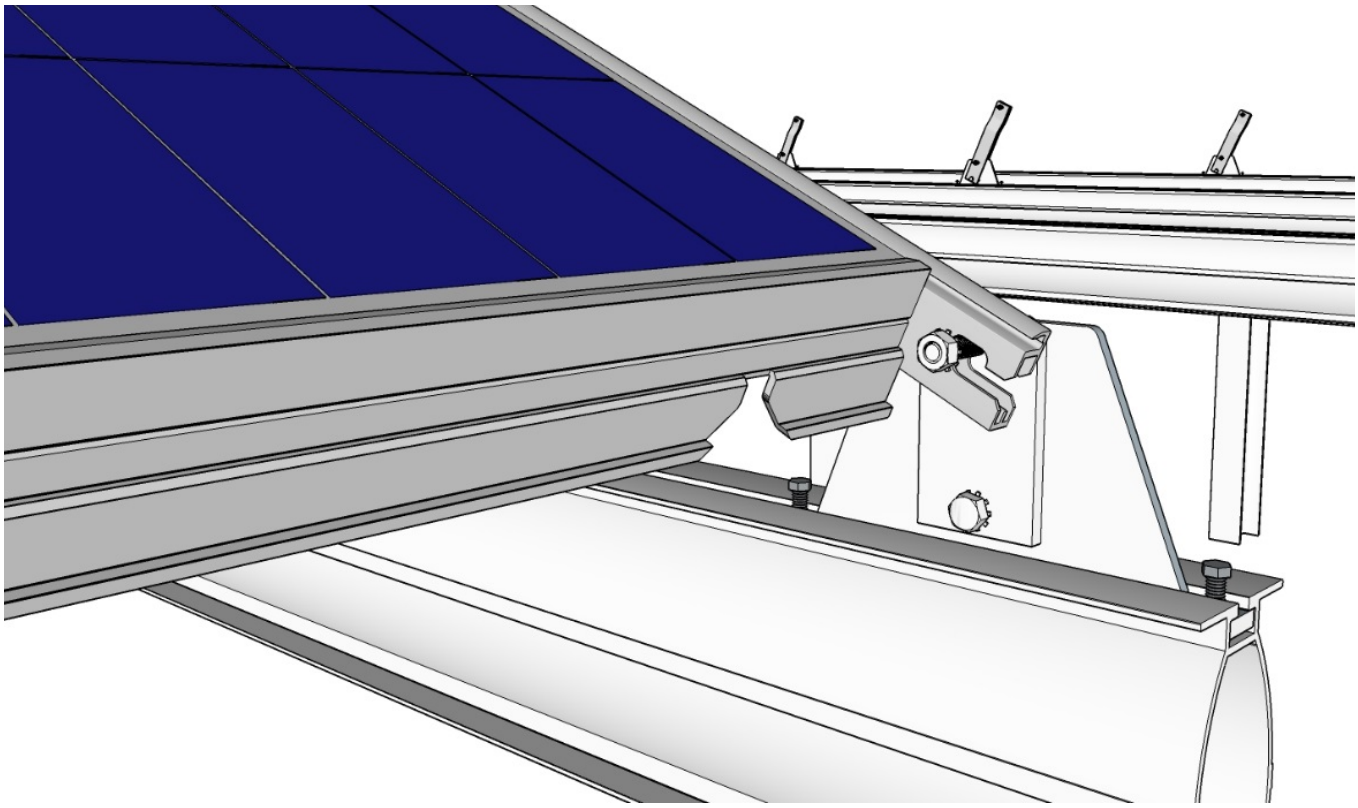

Figure 16

Lay the top of the first module down onto the rails. Slip the slots in the second (north) module's frame over the **upper** stud bolts on the tall fins. Be sure that the dog-leg slot in the module frame sits properly on the stud bolts. Lift the first module and bring the tops of both modules together to form a peak ***(see Figure 17).***

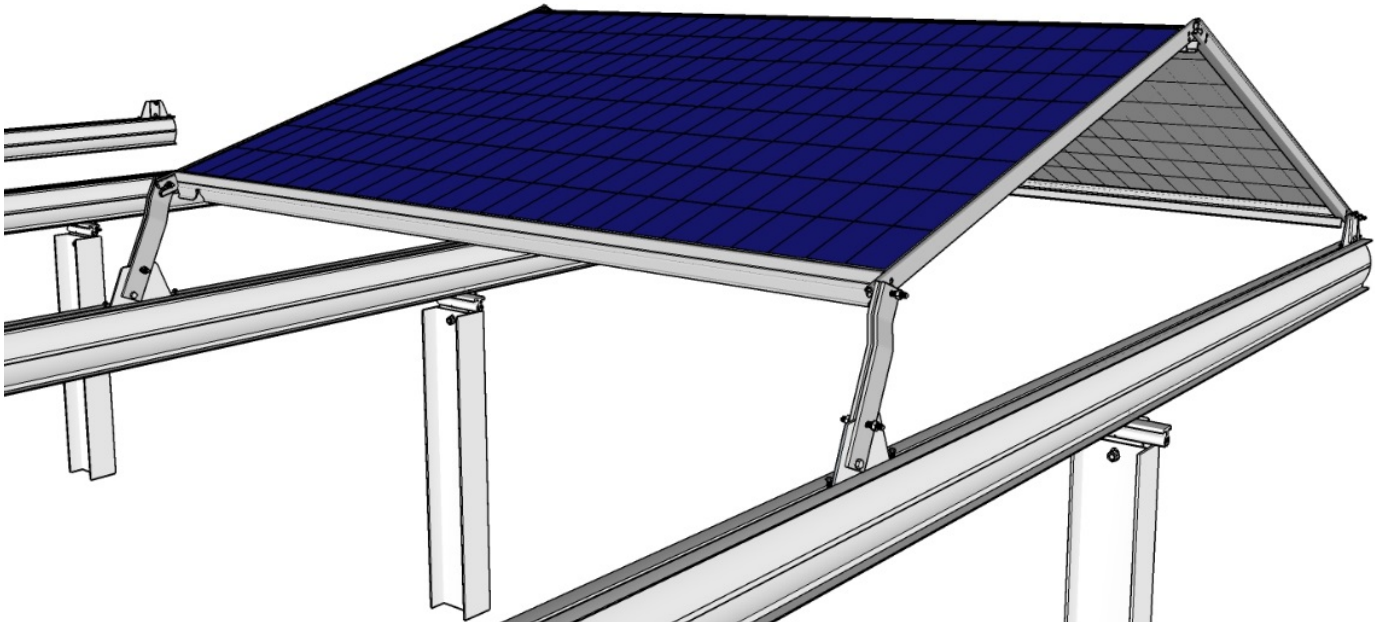

Figure 17

Insert a hairpin cotter into the flat end of a chamfered aluminum pin. On the outer edge of the array side, push the aluminum pin through the holes in the top of each module's frame. Then insert a second hairpin cotter in the middle hole of the aluminum pin ***(see Figure 18).***

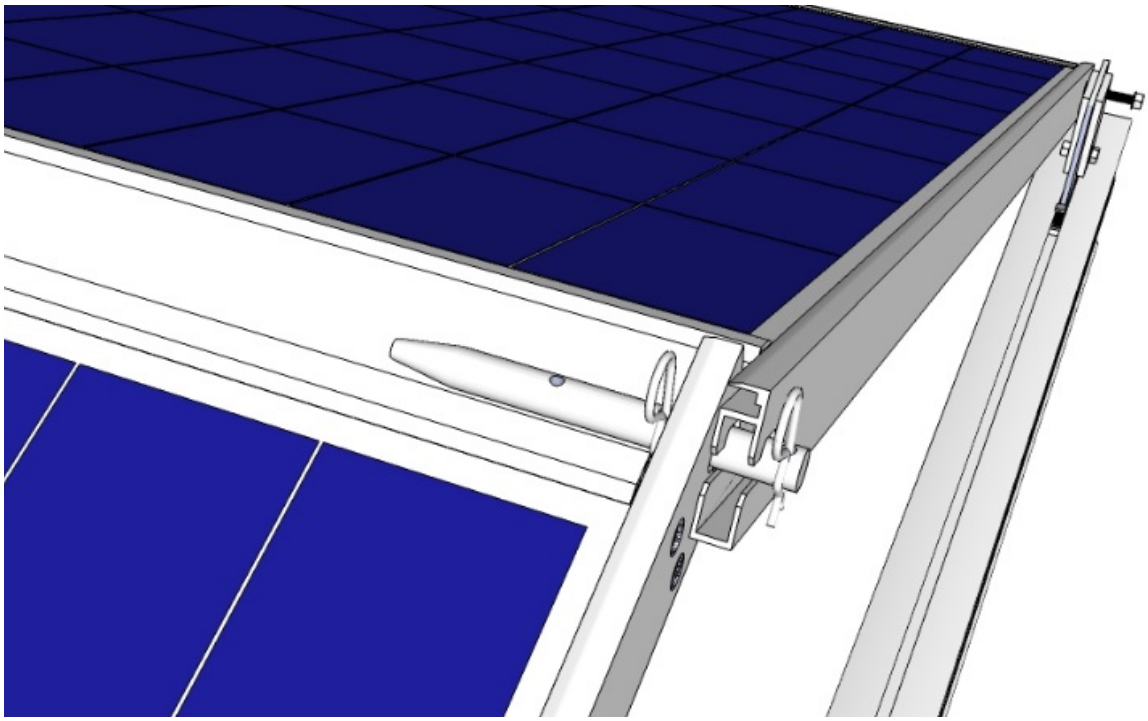

Figure 18

On the other pair of module frame extensions – the side where the array will continue – push an aluminum pin with a hairpin cotter into the module frame holes just far enough to hold them. You will push the aluminum pin in the rest of the way, and add a second hairpin cotter, when the adjacent module pair is installed ***(see Figure 19).***

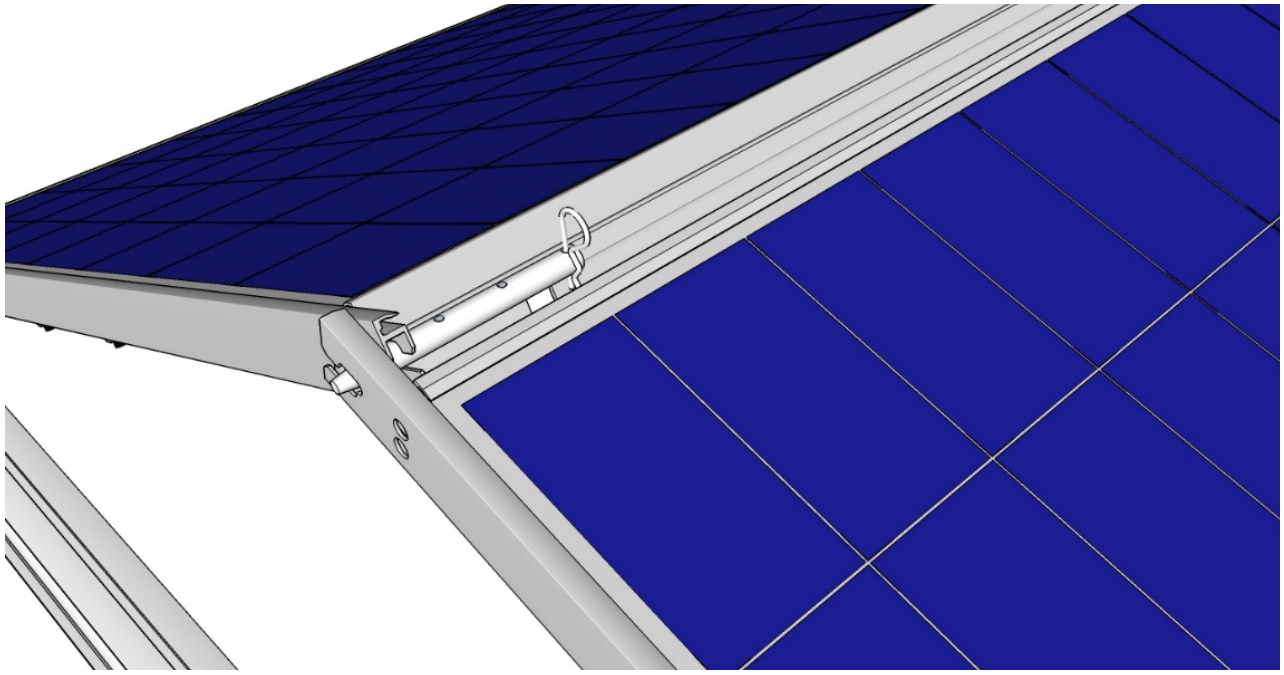

Figure 19

Install Keeper Plugs; Torque Tap Bolts and Nuts

After the module pair has been installed and secured with the chamfered pin, insert a module keeper plug in each of the lower module frame ends, both front and back. Push the module keeper plug in until it clicks into place. This mechanically locks the module to the fin bolt. The module keeper plug can be removed by pulling on its stem ***(see Figure 20).***

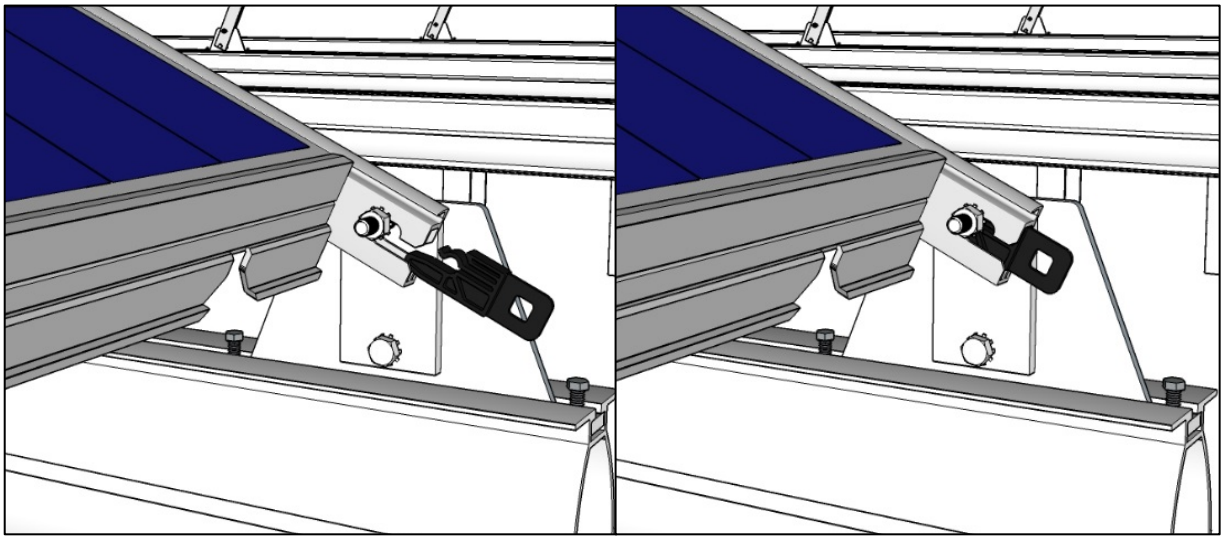

Figure 20

With the keeper plugs installed, torque the nuts that secure the module to the fins to 11.5 ft-lbs.

Before torqueing fin nuts, loosen the finger-tightened nuts on the T-bolts connecting the second rail to its piles. Be sure the rail is still aligned properly with the first rail. Torque the nuts that secure the modules to the fins to 11.5 ft-lbs. This will assure proper rail spacing for exact module fit between fins.

Do not torque the fin nuts until keeper plugs are installed. It will crush the module frame and void the system's warranty.

Proper tightening of the fin nuts is essential for structural integrity and for proper electrical grounding. Failure to install the keeper plugs, or to torque the bolts and nuts connecting the module to the fins to 11.5 ft-lbs will void the system's warranty.

Build Out the Array

Note: installation can proceed from this point either by row or by column, per installer's preference. This manual will detail installation by column, but the principles will be the same for installation by row. Complete the first column by adding more modules, as above ***(see Figure 21).***

Be sure to adjust the second rail, as noted, to ensure that the rail is spaced for exact module fit between fins. Once the fin nuts have been properly torqued, verify that the front of the second rail is still squarely aligned with the front of the first rail. Then torque the nuts on the T-bolts to 11.5 ft-lbs to secure the second rail to its piles.

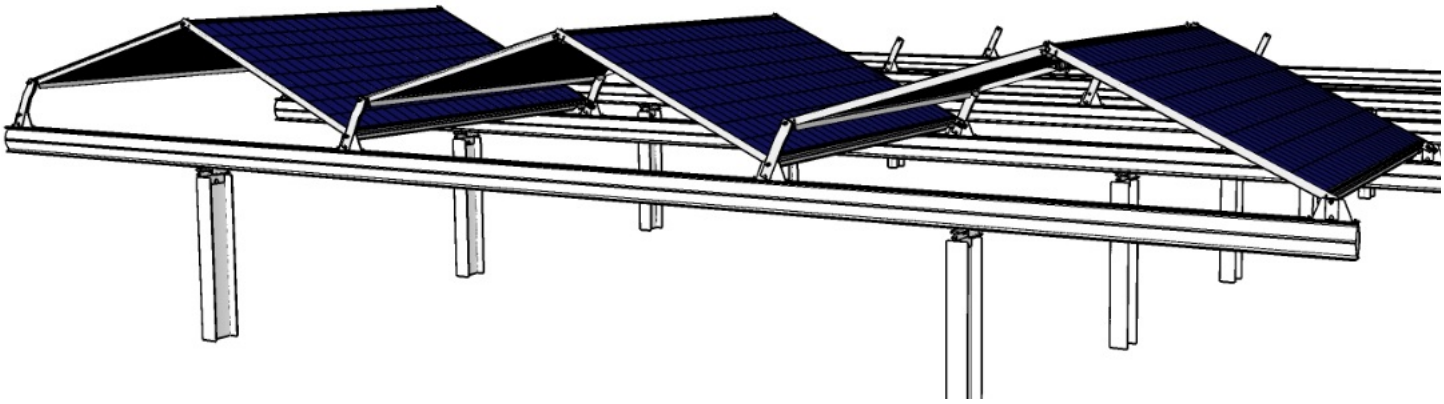

Figure 21

Complete succeeding columns, ensuring that each subsequent rail is properly spaced for exact module fit between fins, and is properly aligned square to the first rail ***(see Figure 22).***

Be sure to torque the nuts on the T-bolts connecting each rail to its support to 11.5 ft-lbs once the rail has been finally positioned by the installation of the modules.

NOTE: It is recommended to omit installation of modules that will cover an inverter bus until the inverter bus is installed *(see page 18)*.

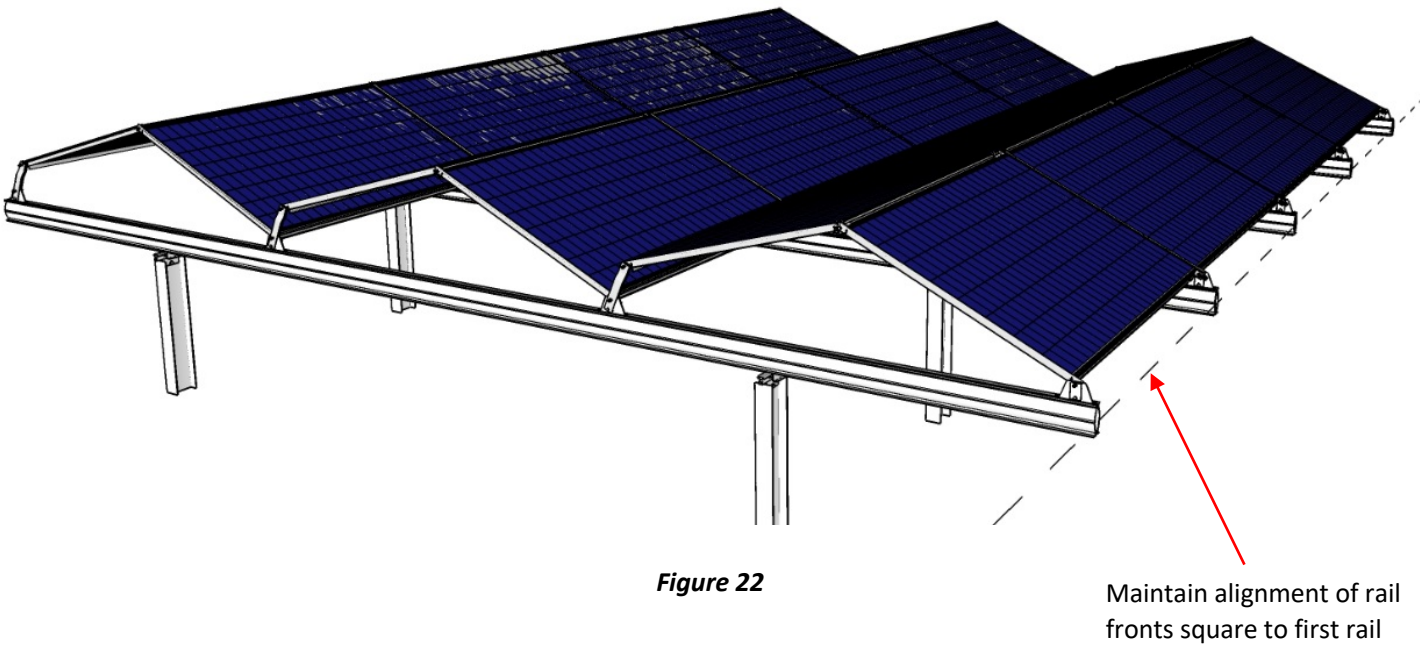

Figure 22

Electrical Installation

Install Inverter Bus

The Global RAIS® Inverter Bus mounts across two adjacent rails under the tent formed by two modules. The inverter bus should be installed only on the array's perimeter or immediately adjacent to an aisle in order to provide access to the DC distribution box.

NOTE: Omit installation of the module and reflector that will cover the inverter bus until the inverter bus is installed.

The DC distribution box is located at one end of the inverter bus. Install that end outboard for easy access. **Thus the DC distribution box will face forward (south) when the inverter bus is on the west side of the array and will face rearward (north) when the inverter bus is on the east side of the array.**

In either case, place the inverter bus so as to maximize the working room on the DC distribution side of the inverter bus, and to ensure that the inverter bus is not directly under the gap between the modules where they come together at the peak. On the **west side** of the array, this means placing the foot of the inverter bus bracket **42"** from the bottom of the tilted vertical bar on the fin to the rear ***(see Figure 23).*** **On the east side of the array the dimension from the rear of the rail to the bracket will be 58".**

Set the inverter bus bracket feet on the two rails that will carry the inverter bus. Insert two $^{5}/_{16}$"-18 x 1" t-bolts into each rail and slide them into the slots on the inverter bus bracket feet (t-bolts and their combo nuts will be found inside the DC distribution box on the inverter bus assembly). Install a $^{5}/_{16}$"-18 combination star washer and hex nut on each t-bolt and torque to 11.5 ft-lbs. Once the inverter bus has been installed, install the module pair that will cover it.

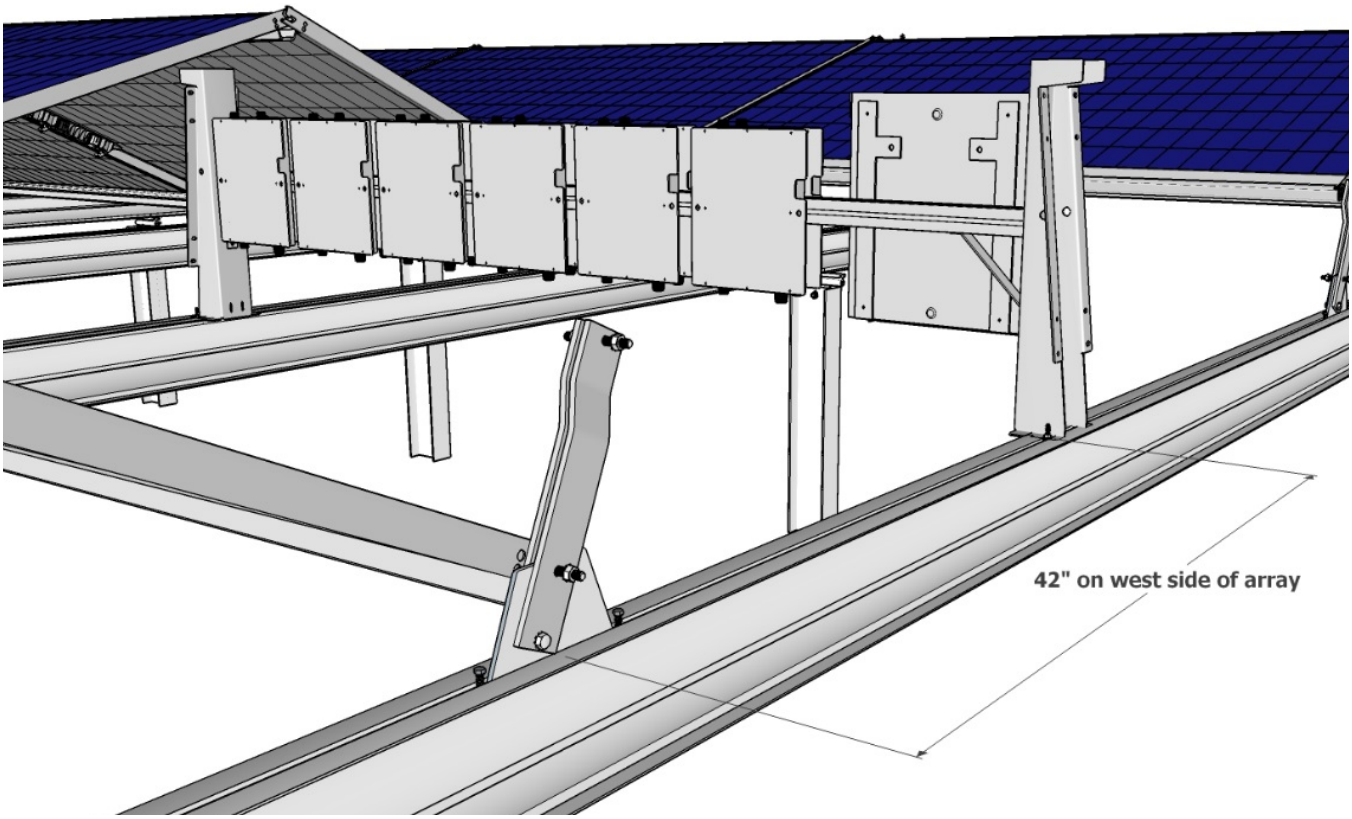

Figure 23

Install DC Conductor

The design of a Global RAIS® system does not require string computations (e.g. open-circuit voltage and short-circuit current) as does a traditional serially-connected system, as the Global RAIS® module's output is voltage-regulated and current-limited. All modules are connected in parallel; 2 AWG copper or aluminum conductors are required.

The maximum current output of the module, shown on the module's label, is not dependent on environmental and illumination conditions. It is a hard limit and will never be exceeded. Thus, by using 1) the appropriate ampacity of the 2 AWG wire selected (dependent on the environmental exposure) and 2) the maximum current output rating of the module, the maximum number of interconnected modules may be determined using the methods outlined in the National Electric Code or other applicable codes.

CAUTION! Do not connect Global RAIS® modules in series! They may only be connected in parallel.

CAUTION: There are no serviceable parts in the Global RAIS® module; any attempt to open the module system will void the initial and power warranties.

In North America, only the following DC conductor types are approved for use with the Global RAIS® Module:

- Alcan #AWG Compact STABILOY ® AA-8030 AL Series XLPE 600 V USE-2 or RHH or RHW-2 SUN-RES, Black
- Southwire AlumaFlex TM 2AWG aluminum alloy AA8176, XLP insulated, USE-2 Black
- Southwire AlumaFlex TM 2AWG aluminum alloy AA8176, XLP insulated, USE-2 White
- Encore Wire 2AWG Copper conductor, Cross-linked polyethylene (XLPE) XHHW-2/RW90, Black

No other conductors may be used. Global RAIS® can supply approved conductor if needed.

The Global RAIS® module features insulation displacement connectors that allow the 2AWG conductor to be connected to the module without stripping the insulation. For the first module on a circuit (the one on that circuit furthest away from the inverter bus), place an end cap over the end of the approved conductor ***(see Figure 24).***

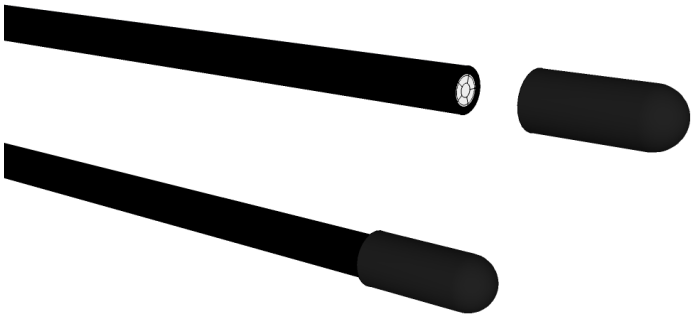

Figure 24

The module's electronics housing clearly marks the positive and negative terminals. There are also corresponding markings on the terminal caps that come attached to the housing. For each branch circuit, the positive terminals of all modules in the branch get wired together with one conductor, and all of the negative terminals get wired together with a second conductor. Note that this is unlike conventional PV module strings. (Refer to your DC wiring plan for branch design.) Be sure to keep track of which conductor is positive and which is negative—they should not be interchanged at the combiner box. Also, if you run more than one circuit together, do not interchange pairs of conductors. The positive and negative of each circuit must be connected to the same bus in the DC combiner box. Failure to follow these instructions will result in no generation from that branch.

To connect the conductor to the first module, lay the conductor into the lug opening, leaving the end cap one to two inches outside of the lug opening. Be sure that the wire is lying flat within the boundaries of the wire channel in the plastic housing ***(see Figure 25).***

Using a $^{3}/_{16}$" hex key, tighten the set screw so that it just makes contact with the conductor's insulation ("finger tight"). Then tighten the set screw 3 ¼ turns. Wait at least 10 seconds, then tighten the set screw ¼ turn more. This is equivalent to torqueing the screw to 9.5 ft-lbs. Tip: use a marker to put an index mark on the set screw so that you can easily count the turns.

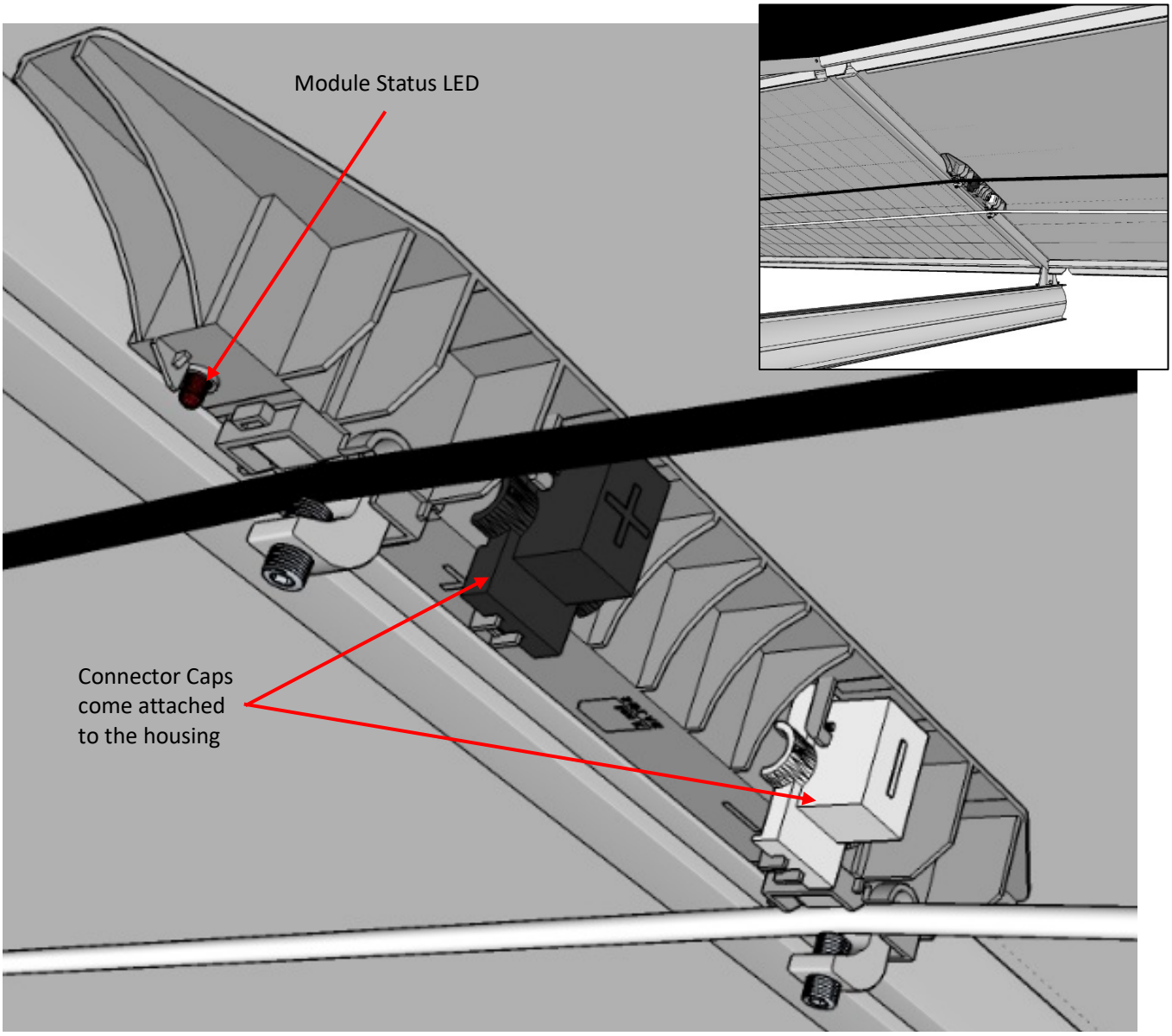

Figure 25

After the set screws have been properly tightened, install the connector caps. The connector caps come attached to the electronics housing ***(see Figure 25).*** **Pull each connector cap away from the module and snap it onto the housing over the appropriate positive or negative terminal.** Note that the caps are prefilled with silicone gel. Align the cap over the lug assembly and snap into place, aligning the tabs with the slots. The caps can snap onto the housing over the connectors in only one way. Repeat the above steps for the other connector. **Both positive and negative connectors must have a sealed connector cap.**

Connect the remaining modules on the circuit using the same method. Leave at least an inch of slack between adjacent east-west connections to allow for a drip loop which will direct rainwater away from the connectors. Install connector caps on all connectors. Make sure that the drip loops of the DC conductors sag downward. Use zip ties or other means to secure the dc conductors where necessary to meet code requirements or to keep the conductors from contacting the roof or other surfaces.

Connect Modules to Inverter Bus

The inverters on the inverter bus will come prewired to each other and to the DC distribution box in the appropriate configuration for your order. To connect the modules to the inverter bus first pry off the DC distribution box door and remove the dead front cover. Make sure all circuit breakers are off. Strip ½" of insulation off the ends of the positive and negative conductors of one branch of modules.

Depending on the inverter bus model and the DC wiring plan, there will be from one to four circuits of modules that need to be connected to the DC distribution box. All of the DC conductors should enter through the centermost cord grips on the bottom of the distribution box. Connect the negative conductors to the negative terminal bars on either side of the distribution box. Connect the positive conductors to the lugs on the circuit breaker bus bars, landing each positive conductor on the same side of the DC distribution box as its matching negative conductor. **It is very important to land the positive and negative conductors of a circuit to the same side of the DC distribution box.** Torque both connections to 50 in-lbs ***(see figure 26).***

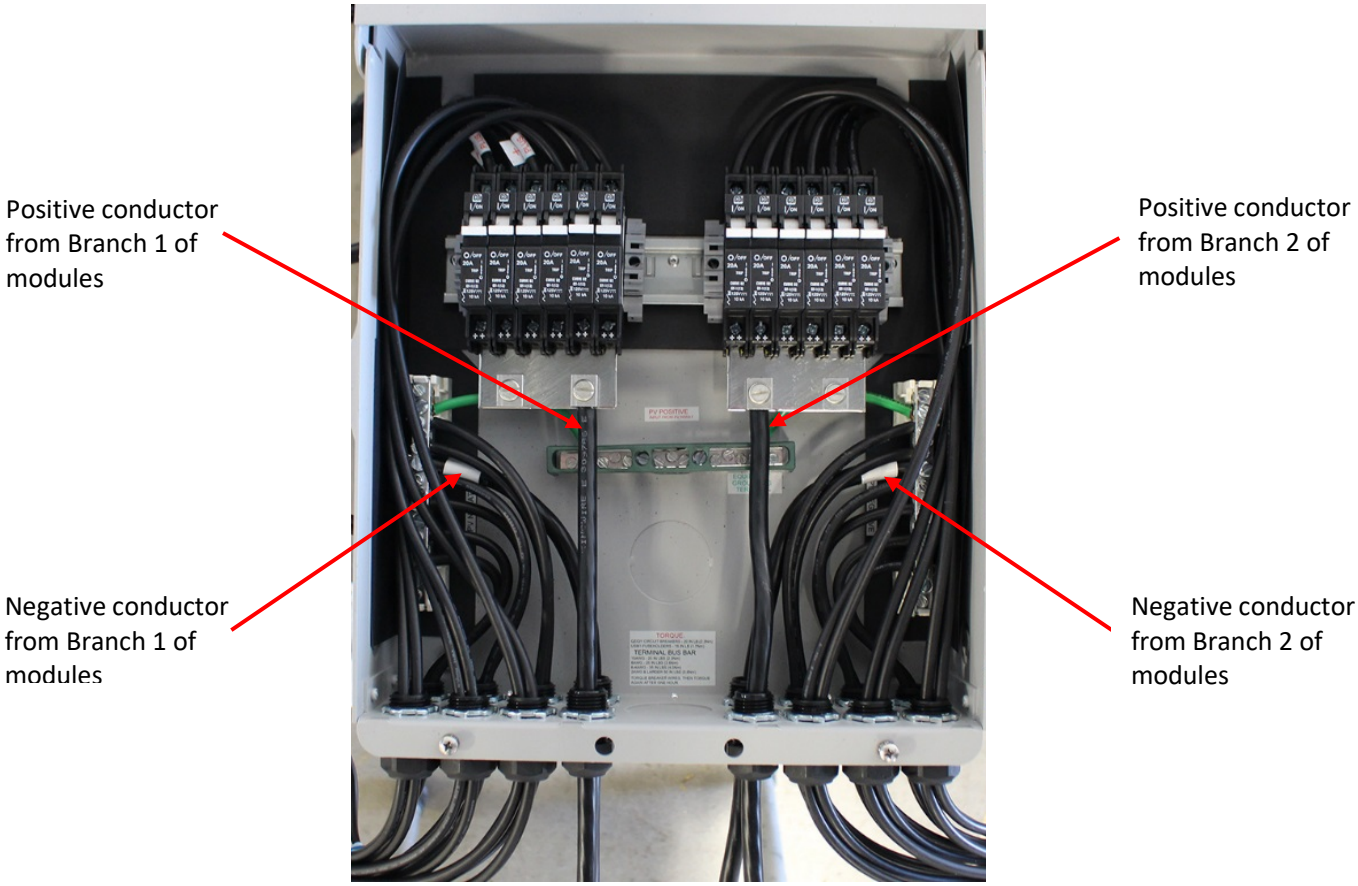

Figure 26

Tighten the cord grips finger tight plus one-half turn. Replace the dead front. You may turn the circuit breakers on at this time, but be aware that the DC voltage will rise to 59 volts and stay there. Replace the cover and secure it.

Install AC Disconnect

An AC disconnect may be required for each inverter bus, or for a group of inverter buses; check your wiring plan for specific locations. The AC disconnect will come with a back plate to be mounted onto one of the inverter bus brackets ***(see Figure 27)***. The AC disconnect will also come with wire whips to connect it to the inverter bus(es) (note: wire whips are not shown on the illustration).

Select the inverter bus on which you will mount the AC disconnect. Attach the AC disconnect's mounting plate to the inverter bus side bracket with four ¼"-20 x ¾" hex head bolts, four ¼" star washers, and four ¼"-20 combination star washers-hex nuts. **Be sure there is a star washer on each side of the connection.** Torque the nuts to 6 ft-lbs.

Note: If the AC disconnect will be connected to two inverter buses, install it on the bracket of the northernmost of the two. If it will be connected to three inverter buses, install it on the bracket of the center inverter bus. If it will be connected to four inverter buses, install it on the bracket of one of the two center inverter buses.

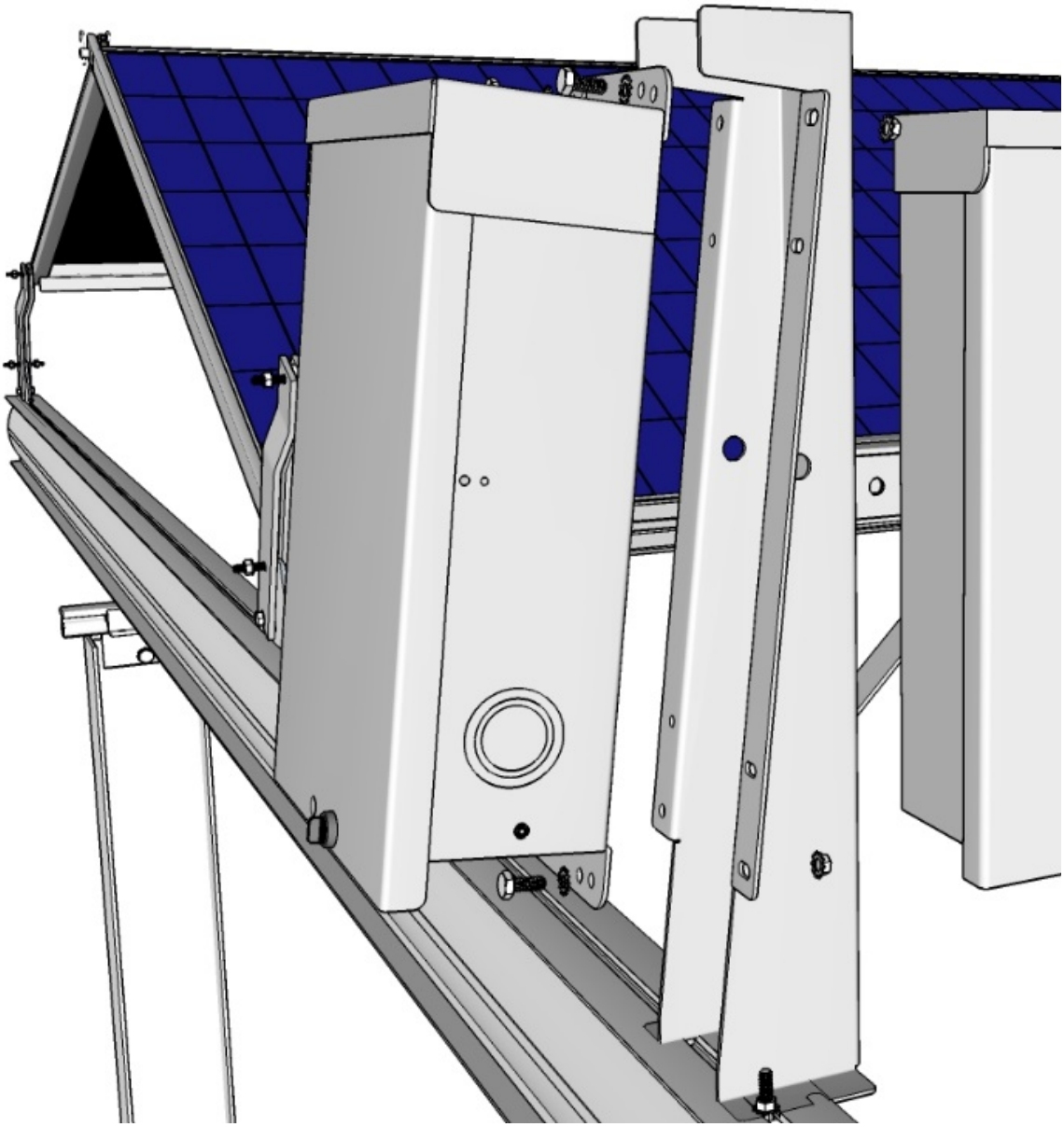

Figure 27

The inverter AC cables are prewired to make chains of inverters. There are two types of AC chains on an inverter bus: complete chains and incomplete chains. The incomplete chains are identified by red tape on the end connectors. Each incomplete chain must be connected to an incomplete chain on an adjacent inverter bus. You can choose either of the red-taped connectors on both inverter buses, and use the supplied bus-interconnect patch cable to make the connections. There will then be two red-taped connectors left (one on each inverter bus); one should be capped and the other should connect to any of the AC disconnect whips.

The complete chains will have connectors without red tape on them. Connect each complete chain to one of the remaining AC disconnect whips. When you are finished, each AC chain should have one end capped and the other end connected to an AC disconnect whip.

If your design does not include the AC disconnects in the kit, you will need to supply your own or use a junction box.

Array Grounding

If the modules, fins, reflector struts, rails and connectors have been installed according to the instructions provided in this manual – using appropriate hardware and tightening torque – the entire assembly can be effectively grounded by use of a suitable ground lug attached to one point along one of the rails.

Appendix – Module Status LED Sequences

The PV module is equipped with an LED that indicates the module's status. The Titan module has the LED on its front face. The Apex module has the LED on the back, on the electronics housing. The LED will generally "blink" or "wink" in a five second cycle, and the number of blinks/winks within that five second cycle indicates the module's status as shown in the following table. A blink is the LED turning on from an otherwise mostly off state, and a wink is the LED turning off from an otherwise mostly on state.

Be careful not to cast a shadow on the module under inspection while checking the LED.

LED Sequence	Module Status	LED Color *
1 blink	**Normal Operation** – Producing power	Green
2 blinks	**Output Power Reduced/Off** – Operating at max voltage The module is limiting its output current (possibly to 0 A) because the DC voltage measured at this module is approximately 59 V. This state is normal if the inverter or battery has reached its maximum capacity or if the inverter is not connected to AC.	Green
3 blinks	**DC Line Potential Out of Range** (<35V or >60V) – Not producing power This condition is normal if the module is not connected or the DC distribution box is off.	Red
4 blinks	**Ground Fault Detected** – Not producing power If a single module flashes this code, turn off the DC switches in the DC distribution box, wait for one minute, and then turn the switches back on. This should clear the error. If it does not clear the error, contact a Global RAIS® Applications Engineer. Multiple modules indicating this condition suggests a more serious system issue has occurred. Check all wiring for breaks or damage where possible, and consult your local electrician or installer if required. Do not contact an Applications Engineer for this condition until the integrity of all wiring has been validated. **CAUTION:** A ground fault occurring on the system represents a potentially serious condition – **DO NOT RESET THE SYSTEM WITHOUT A FULL INSPECTION OF ALL INTERCONNECTIONS AND WIRING.**	Red
5 blinks	**Output Power Off/Reduced** – Insufficient irradiance or partially shaded The module will not produce power while the internal panel voltage is too low, most likely because of insufficient irradiance or the module being partially shaded. Be sure to not shade the module while monitoring the LED.	Yellow
6 blinks	**Over Temperature Protection** – Not producing power The module output current will remain off until the internal temperature drops. Verify the module is clean on the front and the back. If the condition persists, report this to Global RAIS®, but do not remove the module from the system.	Red
1 wink	**Internal Fault** The module will reboot within a minute; contact a Global RAIS® Applications Engineer if the problem persists.	Red
2 winks	**Overcurrent Protection** – Not producing power The output power is off, and the module will reboot within a minute.	Red
3 winks	**Short Circuit Across Module Terminals**	Yellow
7 winks	**Reversed Polarity Connection**	Red

In addition to LED sequences that repeat every 10 seconds, the LED may display in the following manners:

Flashing (½ second on, ½ second off, repeating)	**Power-Up Initialization** – If the module remains in this state for more than 3 minutes, contact a Global RAIS® Applications Engineer.	Yellow
Other	**Contact a Global RAIS® Applications Engineer**, and report the exact LED sequence.	-

* Only the Apex module shows LED sequences in the colors noted. The sequences are the same for both Titan and Apex.

